GRUNDIG SERVICE MANUAL

TV

Ⓓ Btx * 32700 #

Service Manual

Sach-Nr./Part No. 72010-016.10

Zusätzlich erforderliche Unterlagen für den Komplettservice:

Additionally required Service Manuals for the Complete Service:

Service Manual

Sicherheit
Safty

Sach-Nr./Part No. 72010-800.00

Condo 1N5 6kV. 8502200066 00

Grundig passion

CUC 1982
CUC 1951

CUC 1982

M 82-169/9 IDTV (9.21324-02 / GCA 3090)

CUC 1951

M 70-169/9 IDTV (9.21339-02 / GCB 0190)

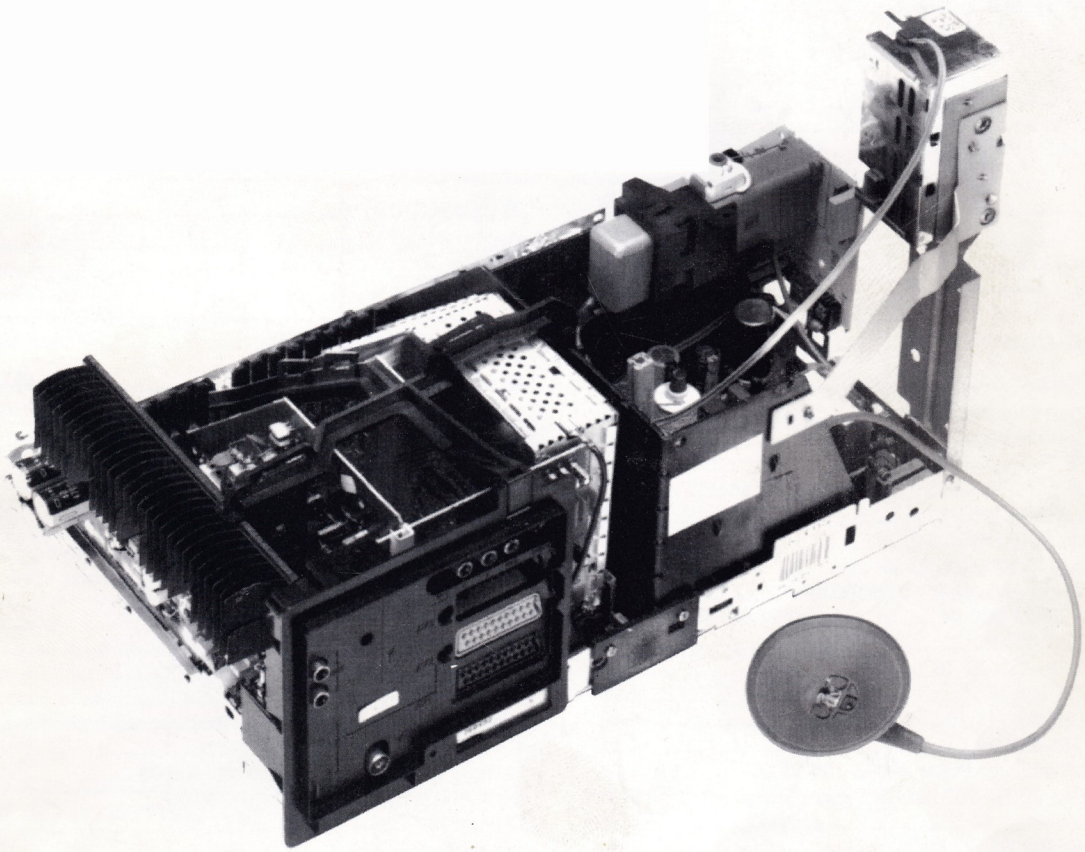

TP 760 (29622-059.01)

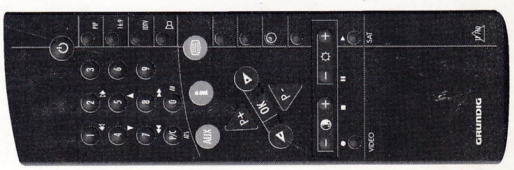

Gesamtschaltplan / General Circuit Diagram / Schema Completo

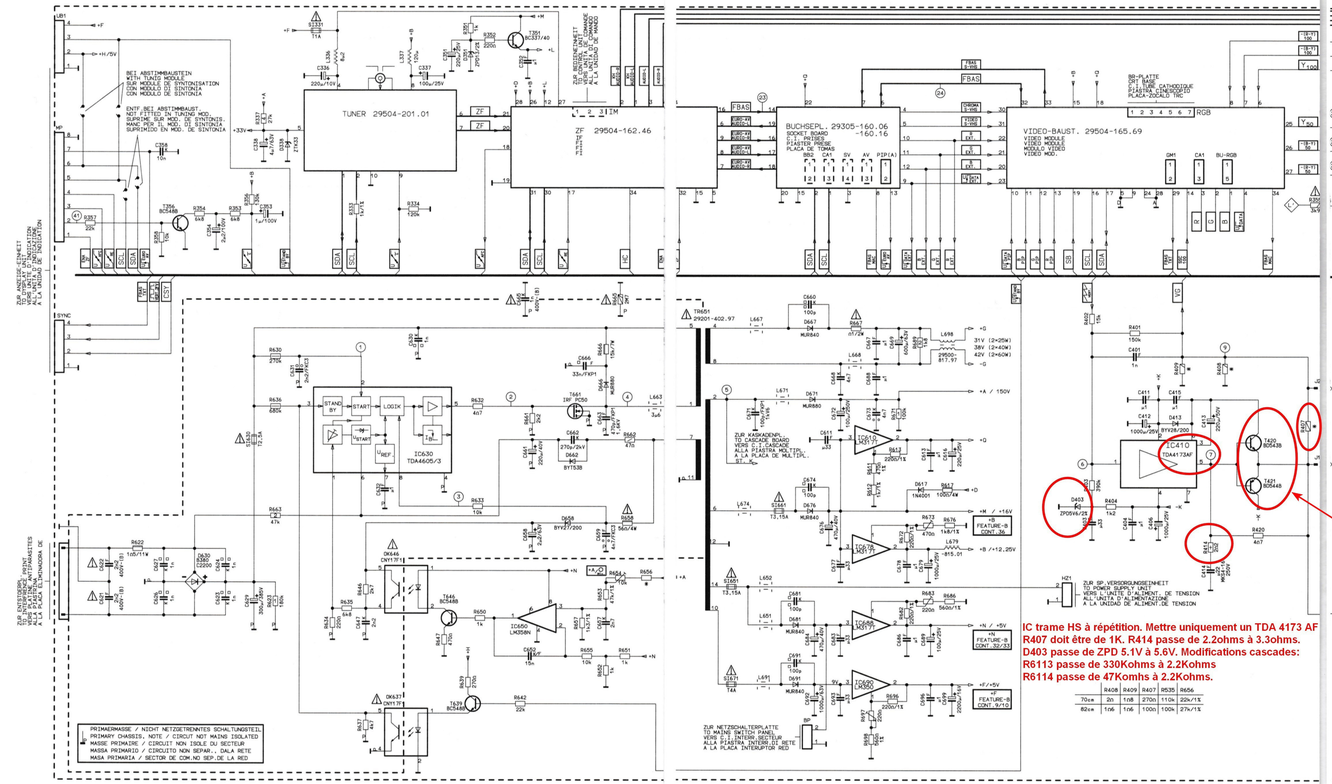

Abgleichlageplan / Alignment Layout

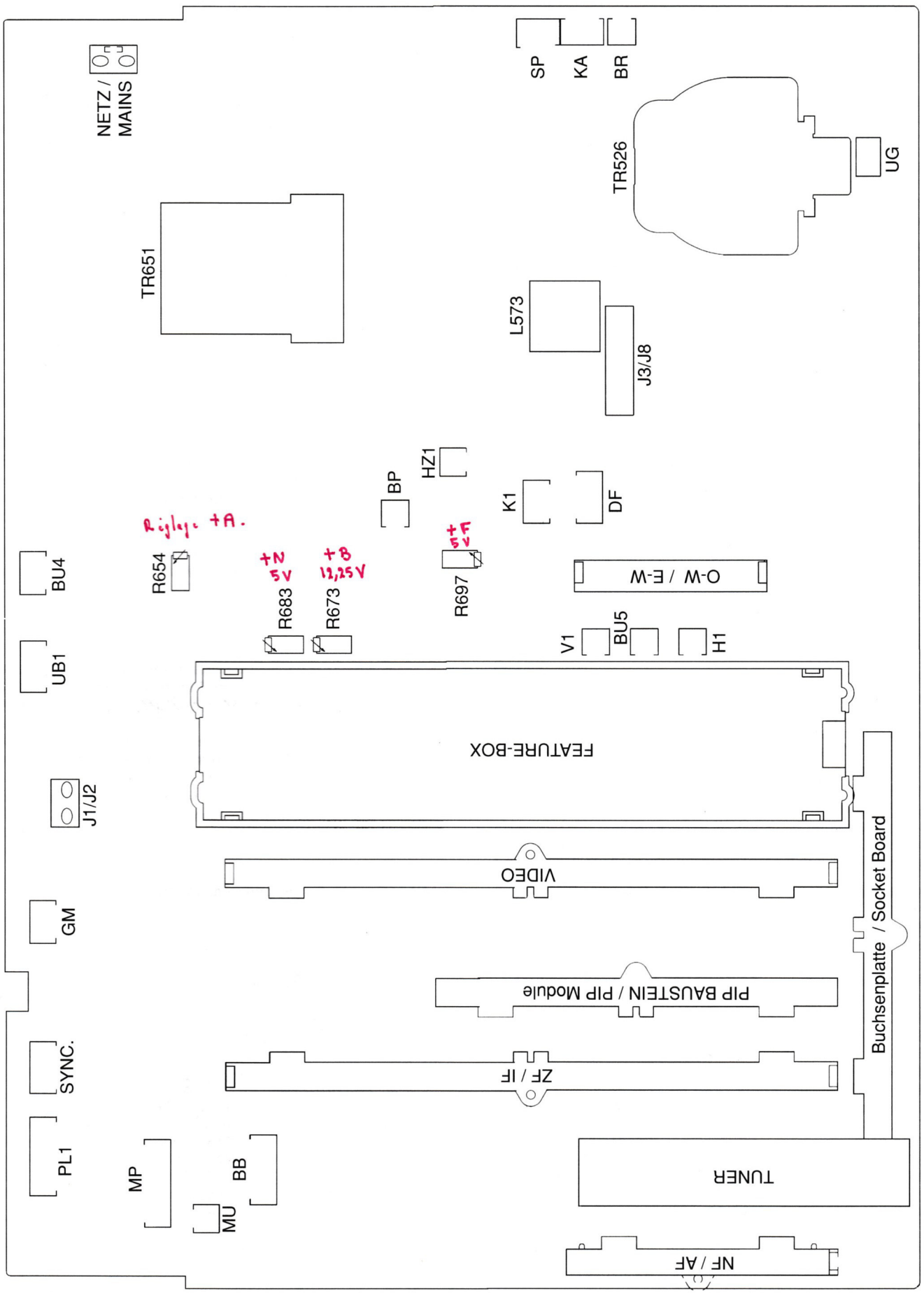

Chassisplatte / Chassis Board

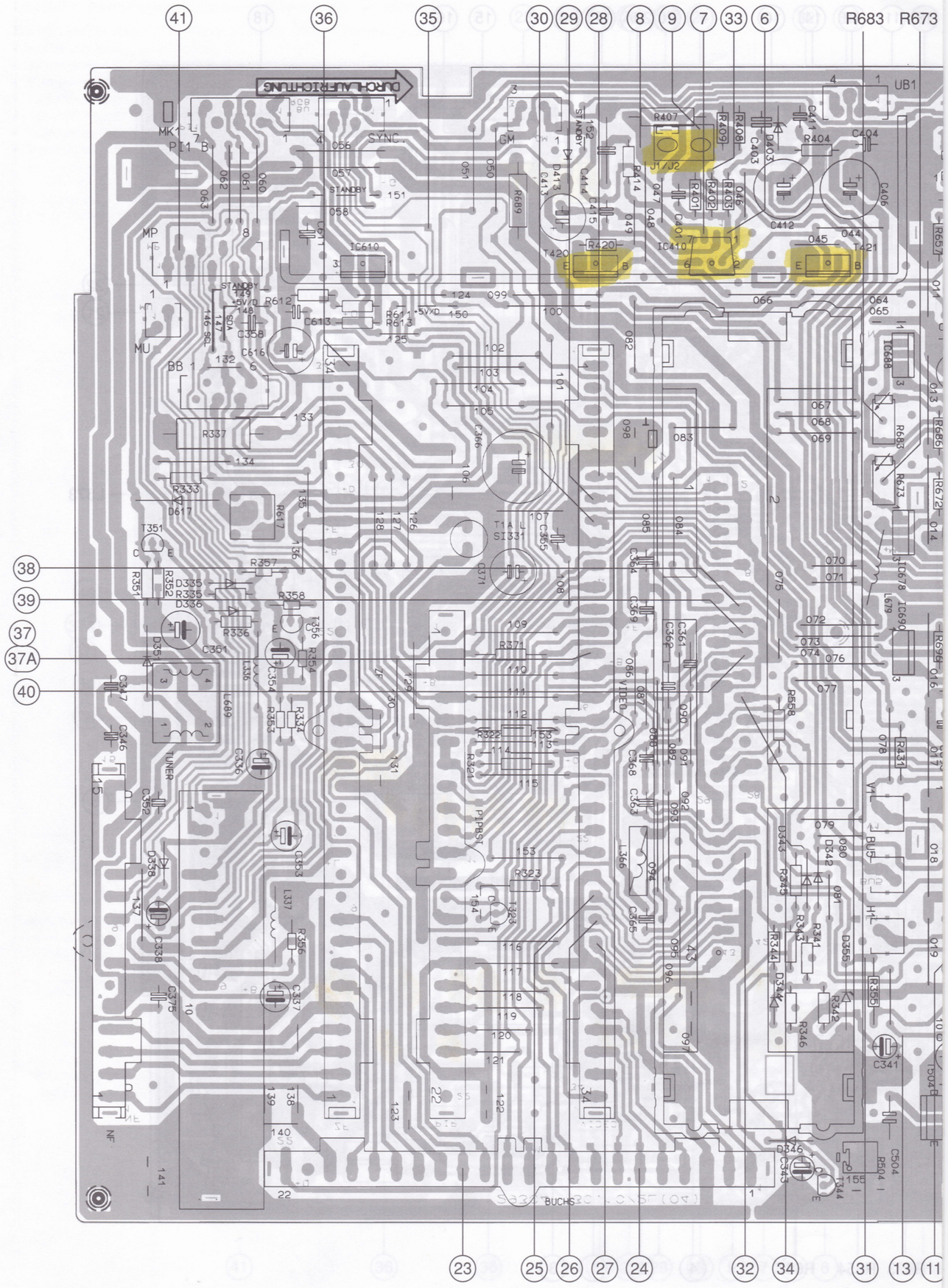
41
36
35
30
29
28
8
9
7
33
6
R683
R673
UB1
DURCH AUFRICHTUNG
MK
P11
SYNC
STANDBY
MP
IC610
MU
BB
R612
C613
C616
R337
R333
D617
R617
T351
R357
R358
R351
R352
D335
R335
D336
R336
C351
T356
R354
C354
R353
L336
C347
C346
C336
TUNER
C352
C353
D338
L337
R356
C337
C338
C375
NF
P1PBSL
BUCHS
R689
C411
C403
R404
C406
R407
R409
R408
R401
R402
R403
C401
C412
C415
C414
D413
R414
R420
T420
IC410
T421
R431
R343
D343
D342
D344
R341
R342
R346
D346
C341
T504
C504
R504
C505
T344
C363
C364
C365
C366
C368
L366
C369
C361
C362
R371
R321
C323
L323
R323
R358
R355
D356
C355
T14
SI331
L689
C371
R568
R698
R699
IC690
L679
D678
R696
R697
R654
R697
4
2
1
3
BU4
R639
R642
R643
R650
IC650
C652
C657
R653
R652
R655
R651
R654
R666
C666
C663
R632
R634
R635
R637
C631
C661
R636
R630
R662
R658
C659
C642
C630
C626
C621
C627
C624
C623
C622
C665
R665
R622
R623
D630
D662
L663
D658
R663
T2A
SI630
IC630
C632
C647
D666
C668
C667
R633
C646
D646
D637
R647
R646
R645
C639
C638
C635
C651
R686
R685
C689
R682
C683
R676
C678
C679
C677
C696
R697
R698
R699
C699
R696
C681
D681
L681
C676
D676
T3.15A
SI651
L674
T4A
SI671
C674
L691
D691
C668
L668
C691
C671
C660
L667
D667
C669
C688
C672
R667
C667
C675
C684
C692
C378
C377
D545
R545
D544
R544
D543
C543
C542
C541
R541
C525
R525
R524
D525
C524
R543
C527
R527
R526
TR526
C529
D529
R528
C528
R576
C526
C530
R551
R552
C517
C514
L514
R514
R577
C513
C512
R573
L571
T572
L572
R572
D577
C577
R570
UG
R553
C516
D536
R554
L573
KA
BR
GRÜN
K/2
K/1
WEISS
R671
S1
C629
29304-730.10/4B(04)
MASSE
TR651
R661
C661
C633
C634
D533
C518
D518
R518
C521
C522
L18/2
L18/1
C519
C501
R501
TR501
R571
C573
C537
C538
C533
R537
R538
R539
C534
C535
C536
L521
C511
C510
R511
R512
R501
D545
D546
C545
R535
R536
R527
C437
D538
R534
R524
R523
R522
R521
R520
R519
R518
R517
R516
R515
R514
R513
R512
R511
R510
R509
R508
R507
R506
R505
R504
R503
R502
R501
D502
D504
C502
C503
D571
D572
L562
L570
T570
C570
C571
C572
C573
C574
C575
C576
C577
C578
C579
C580
C581
C582
C583
C584
C585
C586
C587
C588
C589
C590
C591
C592
C593
C594
C595
C596
C597
C598
C599
C600
C601
C602
C603
C604
C605
C606
C607
C608
C609

Chassisplatte / Chassis Board

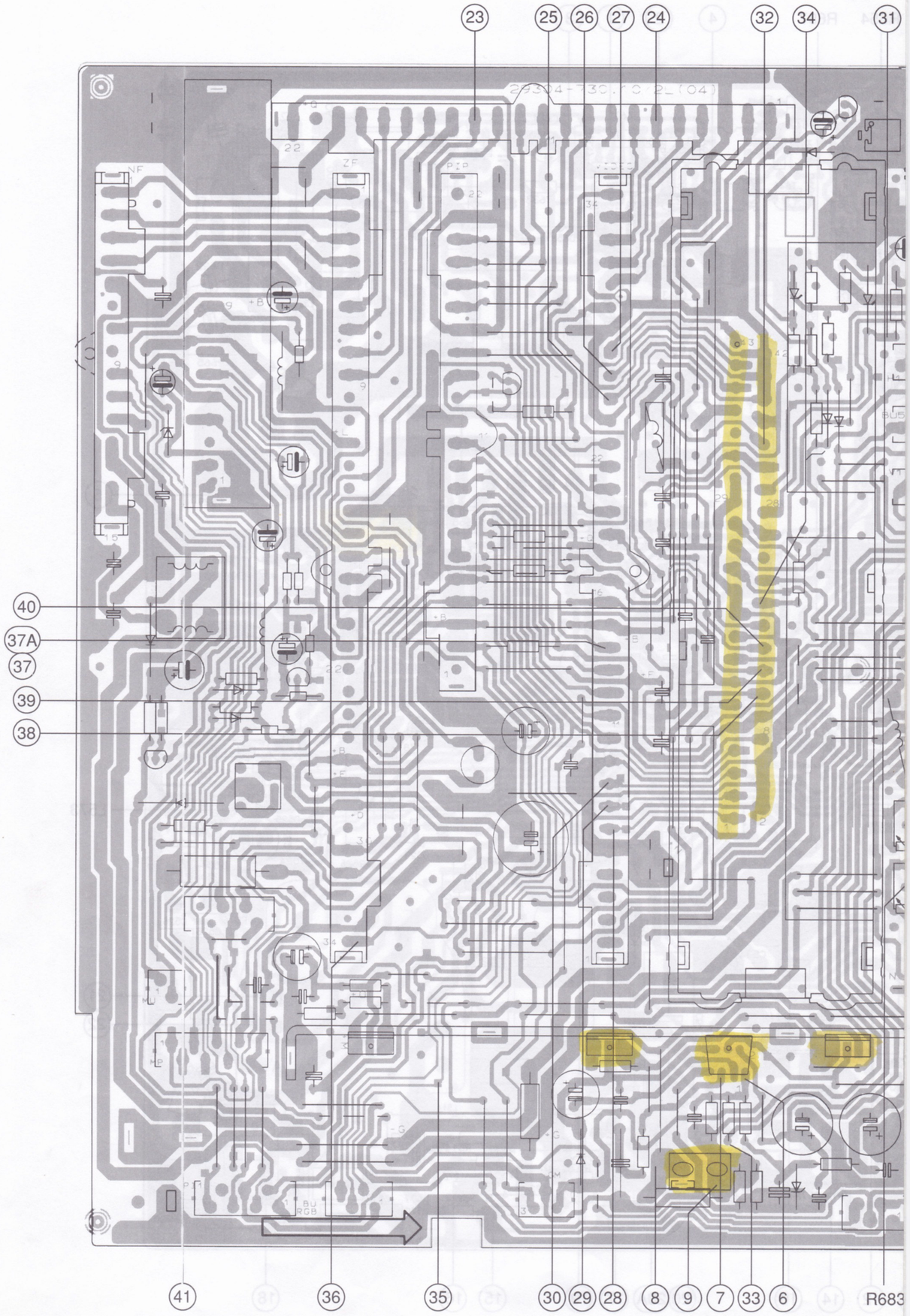

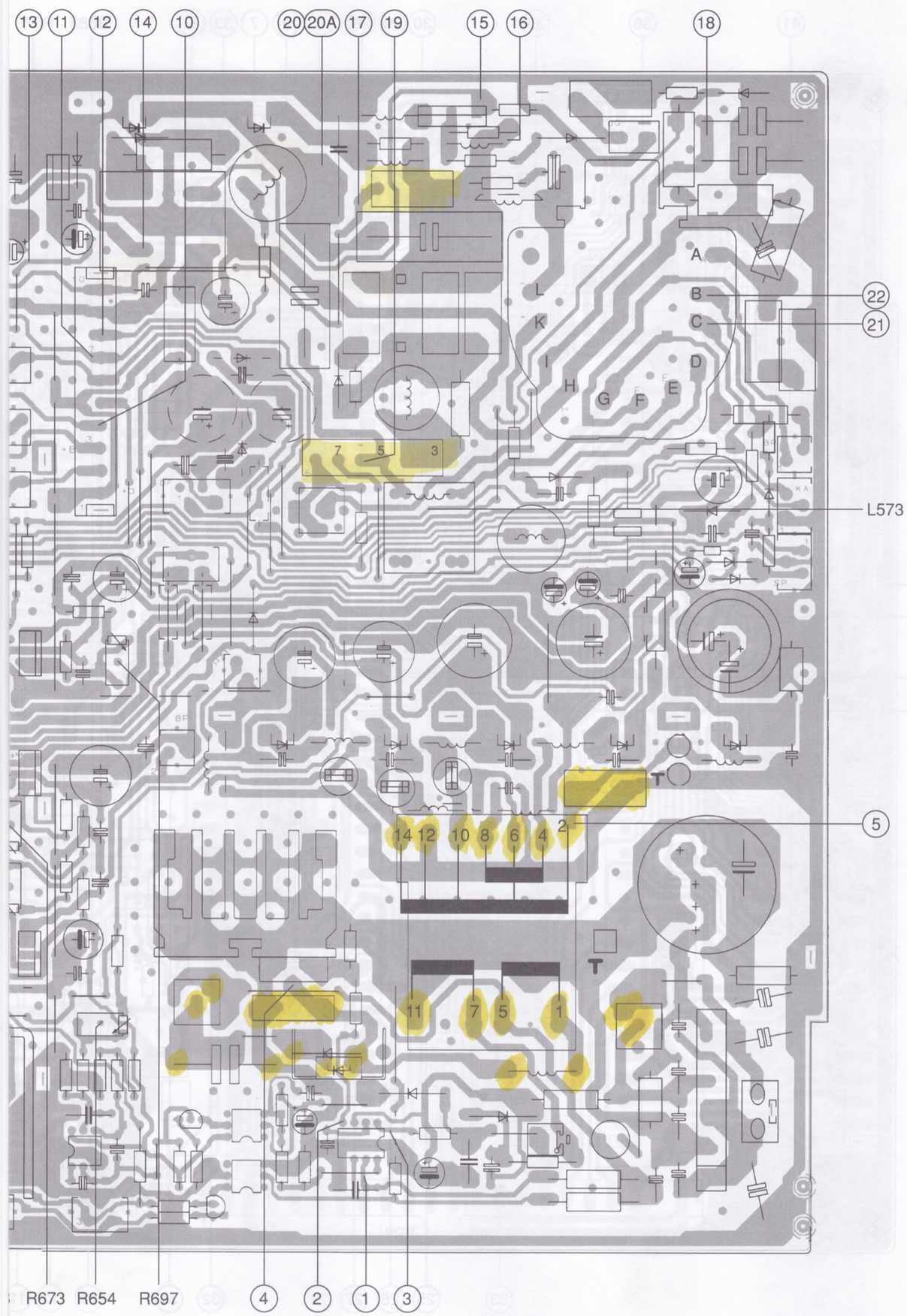

Oszillogramme Chassisplatte
Oscillograms Chassis Board

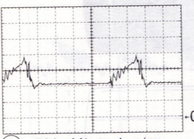

1 500mV/cm, 1µs/cm

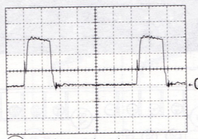

2 5V/cm, 1µs/cm

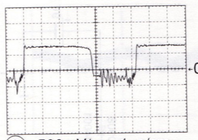

3 500mV/cm, 1µs/cm

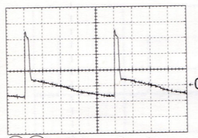

7 8 10V/cm, 2ms/cm

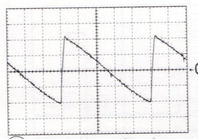

9 500mV/cm, 2ms/cm

10 1V/cm, 10µs/cm

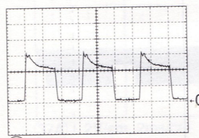

14 10V/cm, 10µs/cm

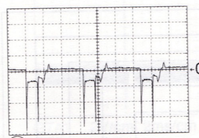

15 5V/cm, 10µs/cm

16 200V/cm, 10µs/cm

20 50V/cm, 10µs/cm

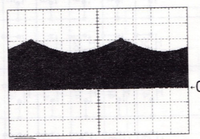

20A 50V/cm, 2ms/cm

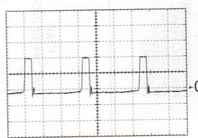

21 50V/cm, 10µs/cm

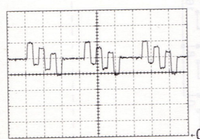

26 1V/cm, 20µs/cm

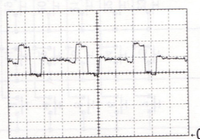

27 1V/cm, 20µs/cm

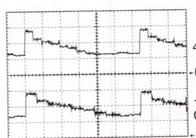

28 1V/cm, 5µs/cm

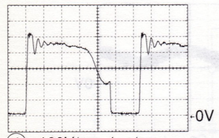

4 100V/cm, 1µs/cm

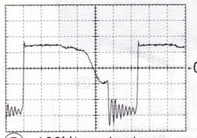

5 100V/cm, 1µs/cm

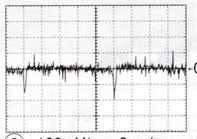

6 100mV/cm, 2ms/cm

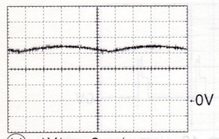

11 1V/cm, 2ms/cm

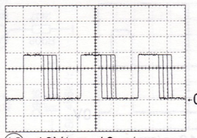

12 10V/cm, 10µs/cm

13 1V/cm, 10µs/cm

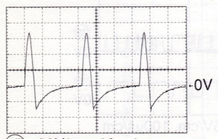

17 20V/cm, 10µs/cm

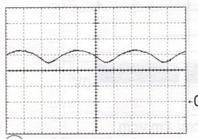

18 50V/cm, 10µs/cm

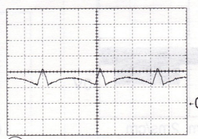

19 100V/cm, 10µs/cm

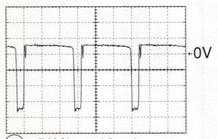

22 50V/cm, 10µs/cm

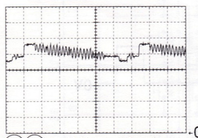

23 24 1V/cm, 10µs/cm

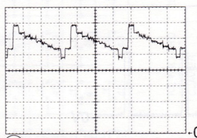

25 1V/cm, 20µs/cm

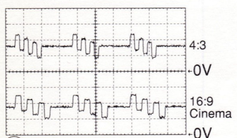

29 1V/cm, 10µs/cm

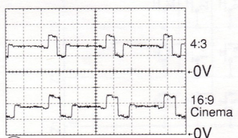

30 1V/cm, 10µs/cm

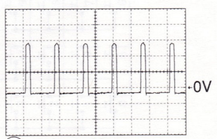

31 2V/cm, 20µs/cm

zillogramme Chassisplatte
scillograms Chassis Board

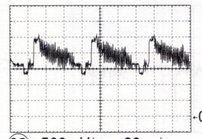

32 500mV/cm, 20µs/cm

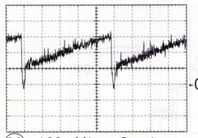

33 100mV/cm, 2ms/cm

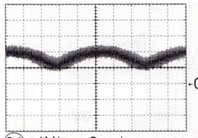

34 1V/cm, 2ms/cm

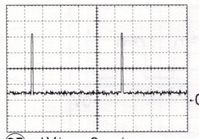

35 1V/cm, 2ms/cm

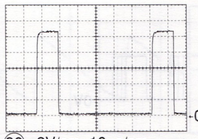

36 2V/cm, 10µs/cm

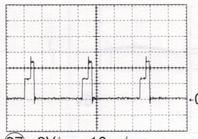

37 2V/cm, 10µs/cm

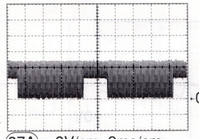

37A 2V/cm, 2ms/cm
16:9 Cinema

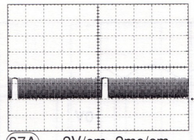

37A 2V/cm, 2ms/cm
4:3

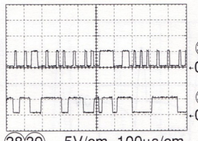

38 39 5V/cm, 100µs/cm

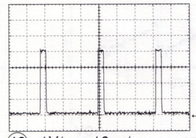

40 1V/cm, 10µs/cm

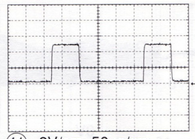

41 2V/cm, 50µs/cm

Bedieneinheit mit Text / Control Unit with Text / Unita di Comando con Televideo

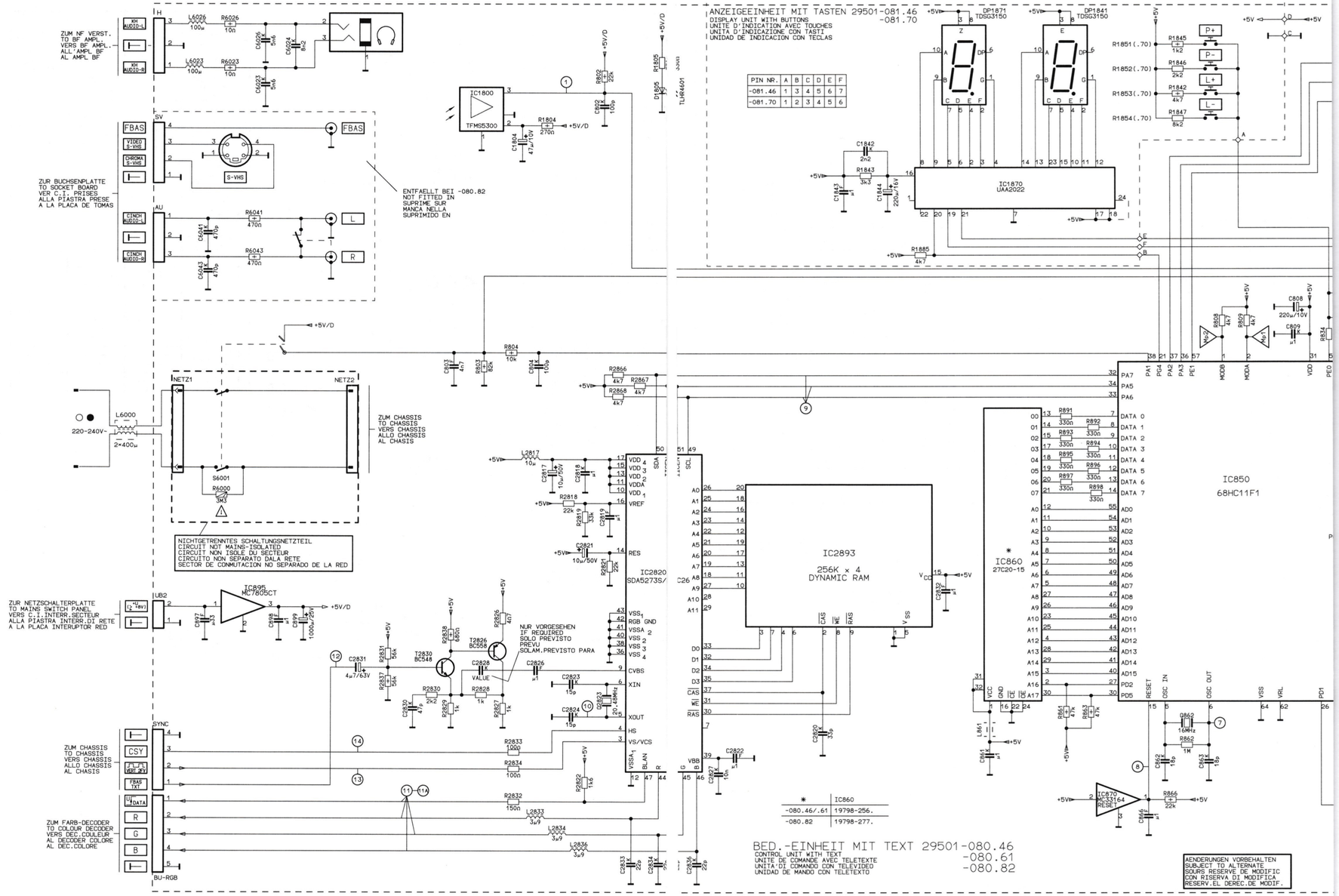

Feature-Box

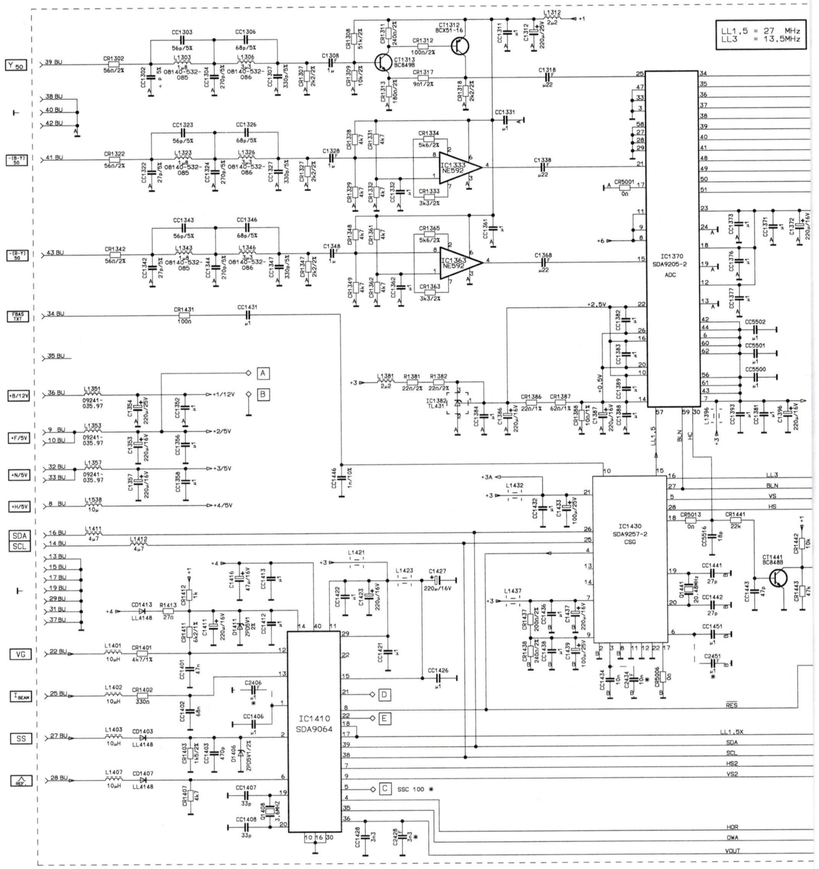

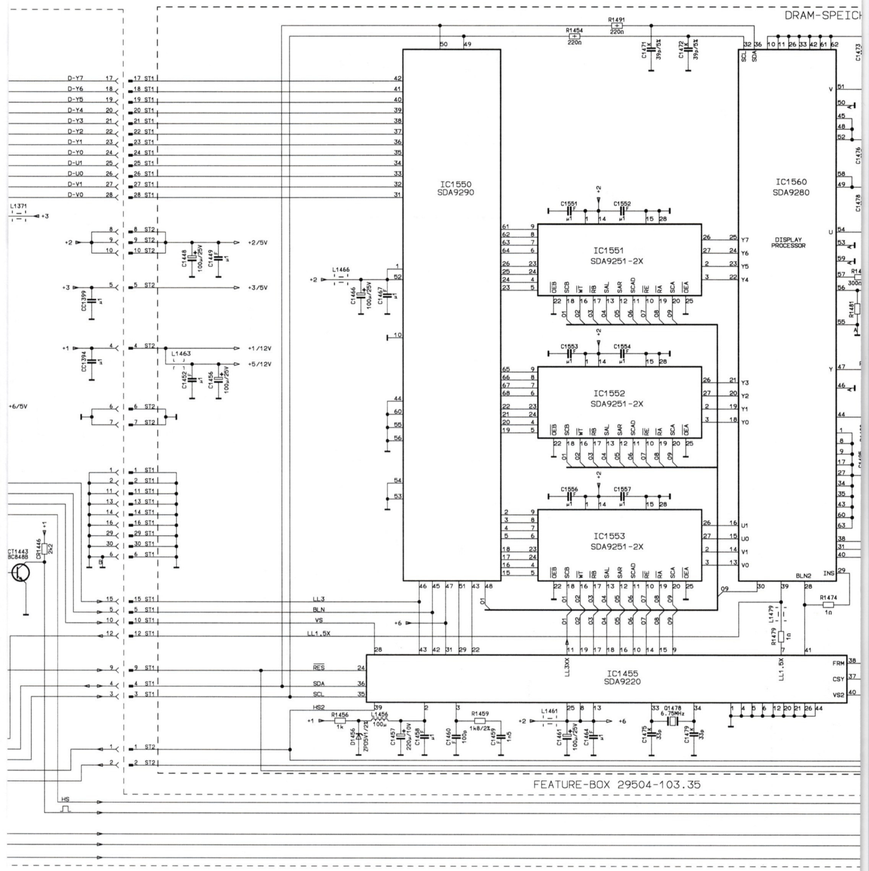

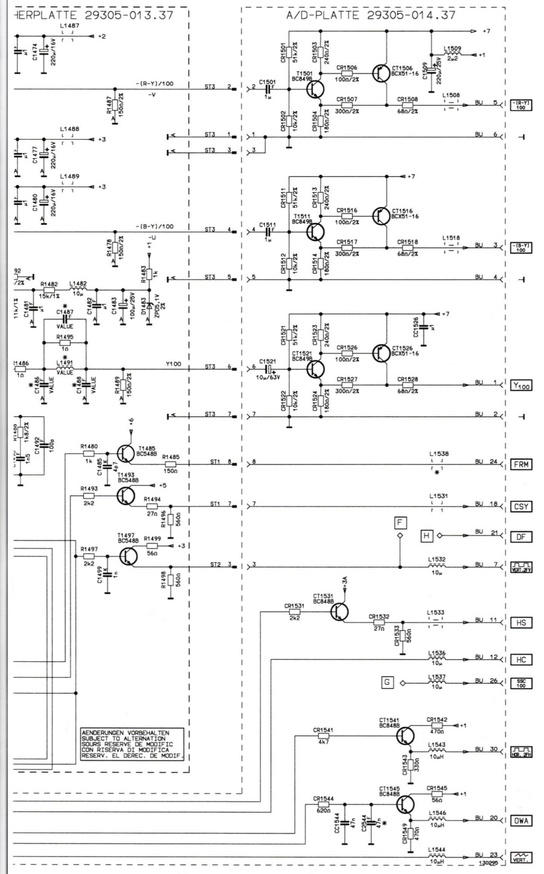

	BU-	ST1	ST2	ST3
01	Y/100 ⟶	MASSE	HS2	MASSE ANALOG
02	MASSE	MASSE	VS2	-(R-Y)/100
03	-(B-Y)/100 ⟶	SCL	VERT. 2FV	MASSE ANALOG
04	MASSE	SDA	+1/12V	-(B-Y)/100
05	-(R-Y)/100 ⟶	BLN	+3/5V	MASSE ANALOG
06	MASSE	MASSE	MASSE	Y/100
07	VERT.2FV ⟶	CSY	MASSE	MASSE ANALOG
08	⟶ +H (+4/5V)	FRM	+2/5V	
09	⟶ +F (+2/5V)	RES	+2/5V	
10	⟶ +F (+2/5V)	VS	+2/5V	
11	HS ⟶	MASSE		
12	HC ⟶	LL1.5X		
13	MASSE	MASSE		
14	⟶ SCL	MASSE		
15	MASSE	LL3		
16	⟶ SDA ⟶	MASSE		
17	MASSE	D-Y7		
18	CSY ⟶	D-Y6		
19	MASSE	D-Y5		
20	DWA ⟶	D-Y4		
21	DF ⟶	D-Y3		
22	⟶ VG	D-Y2		
23	VERT. ⟶	D-Y1		
24	FRM ⟶	D-Y0		
25	⟶ IBEAM	D-U1		
26	SSC/100 ⟶	D-U0		
27	⟶ SS	D-V1		
28	⟶ ⏃ REF	D-V0		
29	MASSE	MASSE		
30	HDR.2FH ⟶	MASSE		
31	MASSE			
32	⟶ +N (+3/5V)			
33	⟶ +N (+3/5V)			
34	⟶ BAS			
35	FREI			
36	⟶ +B(+1/12V)			
37	MASSE			
38	MASSE ANALOG			
39	⟶ Y50			
40	MASSE ANALOG			
41	⟶ -(B-Y)/50			
42	MASSE ANALOG			
43	⟶ -(R-Y)/50			

* NUR VORGESEHEN
ONLY IF REQUIRED
PREVU
SOLO PREVISTO
SOLAM.PREVISTO

PLCC68

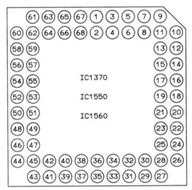

IC VON UNTEN
IC BOTTOM VIEW
IC VUES DE DESSOUS
IC VEDUTO DA SOTTO
IC VISTO POR DEBAJO

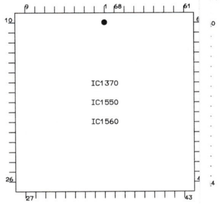

IC VON OBEN
IC TOP VIEW
IC VUES DE DESSOUS
IC VEDUTO DA SOPRA
IC VISTO DESDE ARRIBA

PLCC44

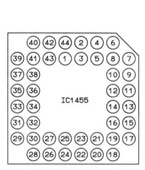

IC VON UNTEN
IC BOTTOM VIEW
IC VUES DE DESSOUS
IC VEDUTO DA SOTTO
IC VISTO POR DEBAJO

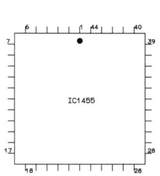

IC VON OBEN
IC TOP VIEW
IC VUES DE DESSOUS
IC VEDUTO DA SOPRA
IC VISTO DESDE ARRIBA

Tuner

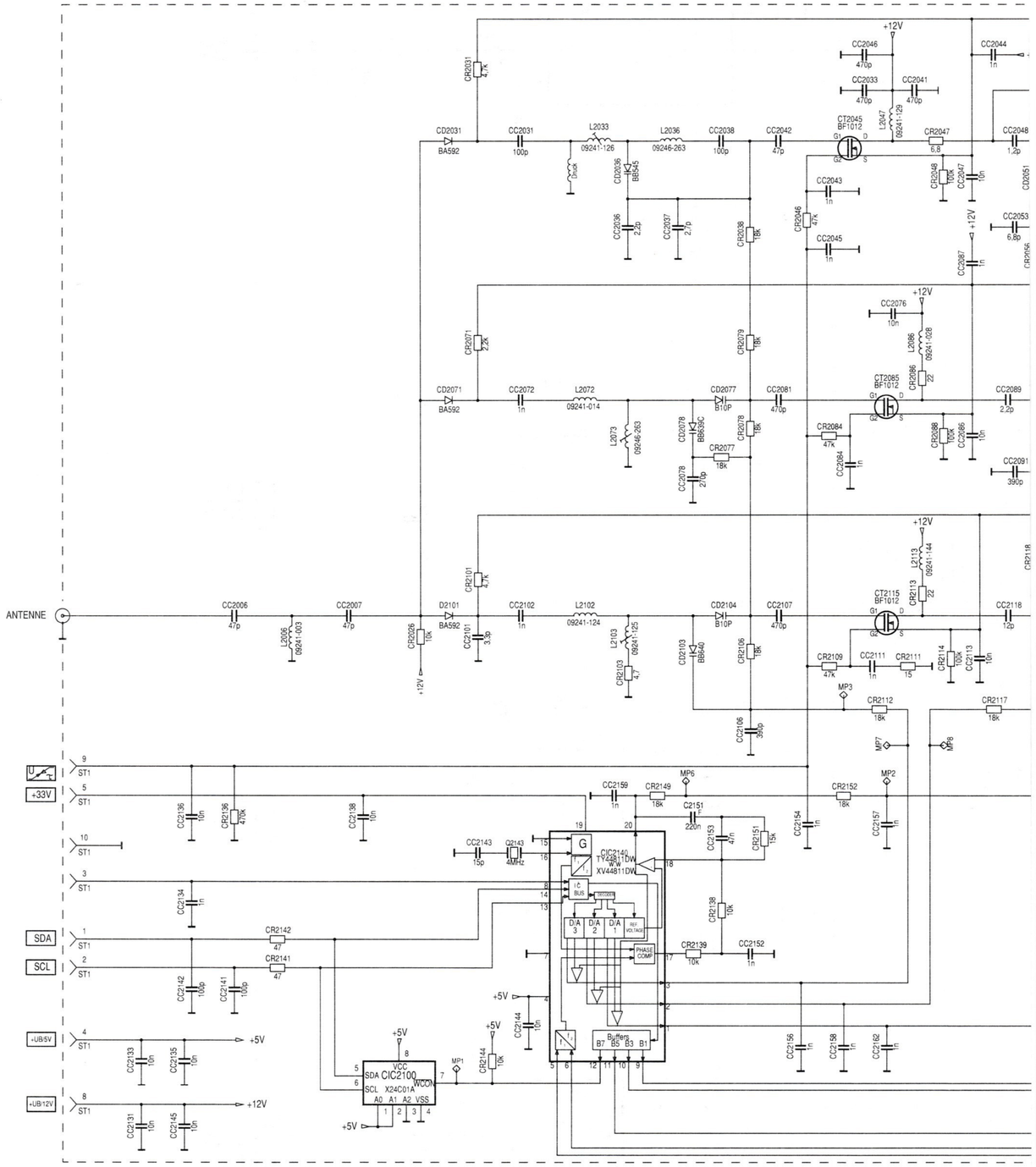

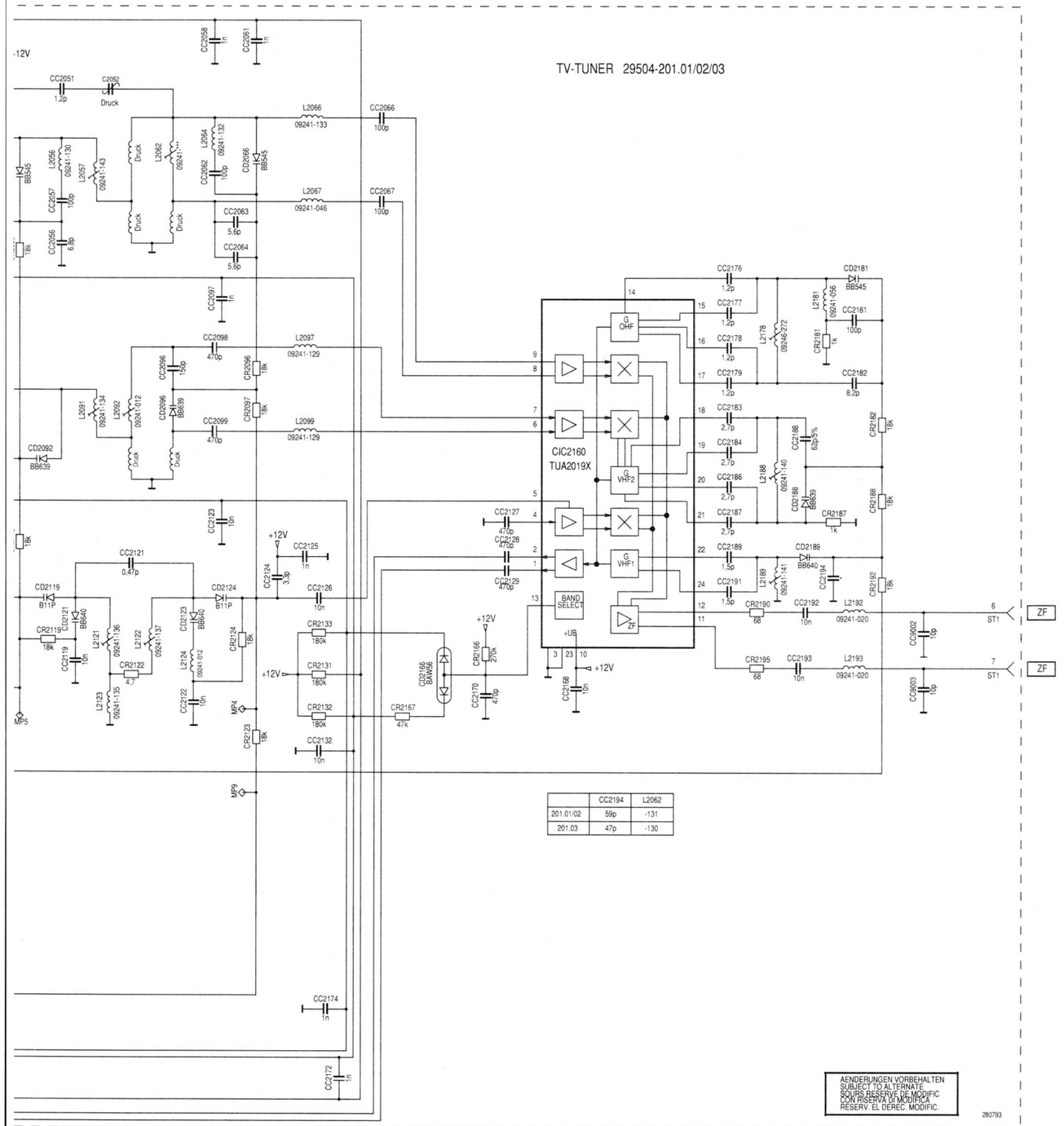

	CC2194	L2062
201.01/02	59p	-131
201.03	47p	-130

ZF-Verstärker / IF Amplifier / Amplificatore FI

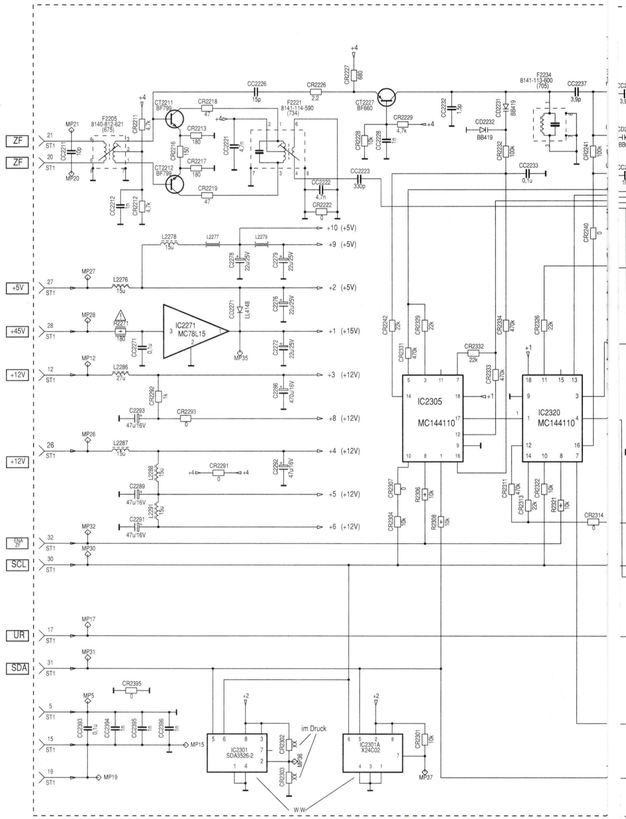

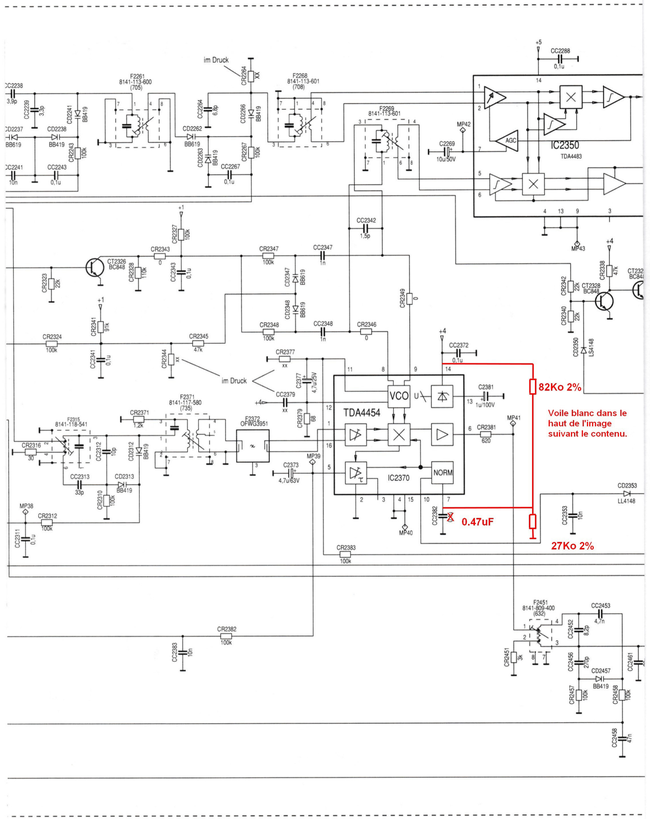

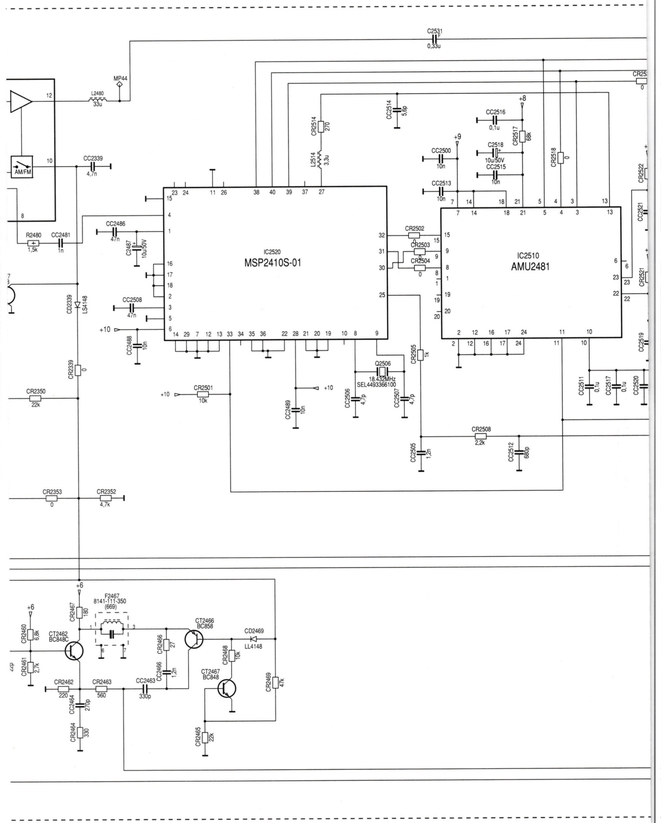

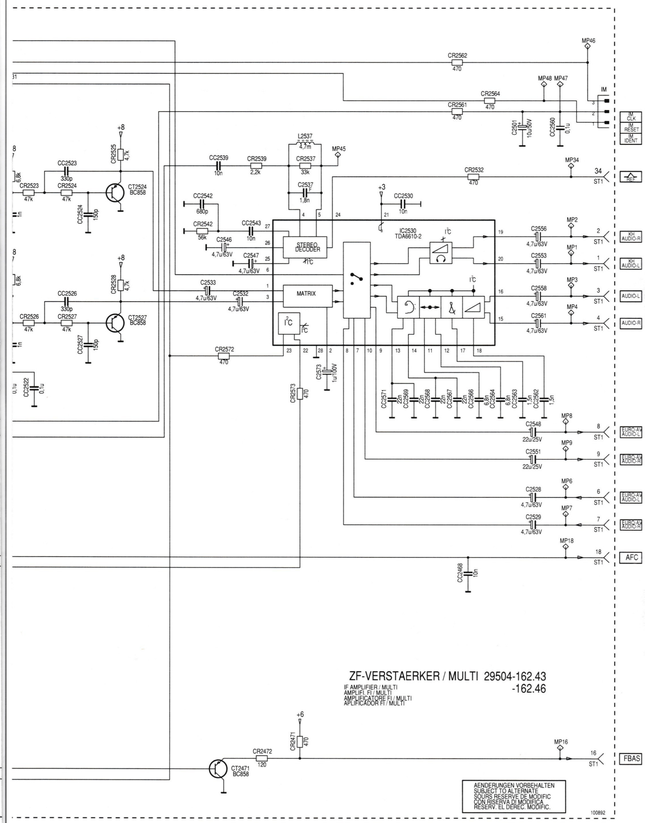

Video-Baustein / Video Module / Modulo Video

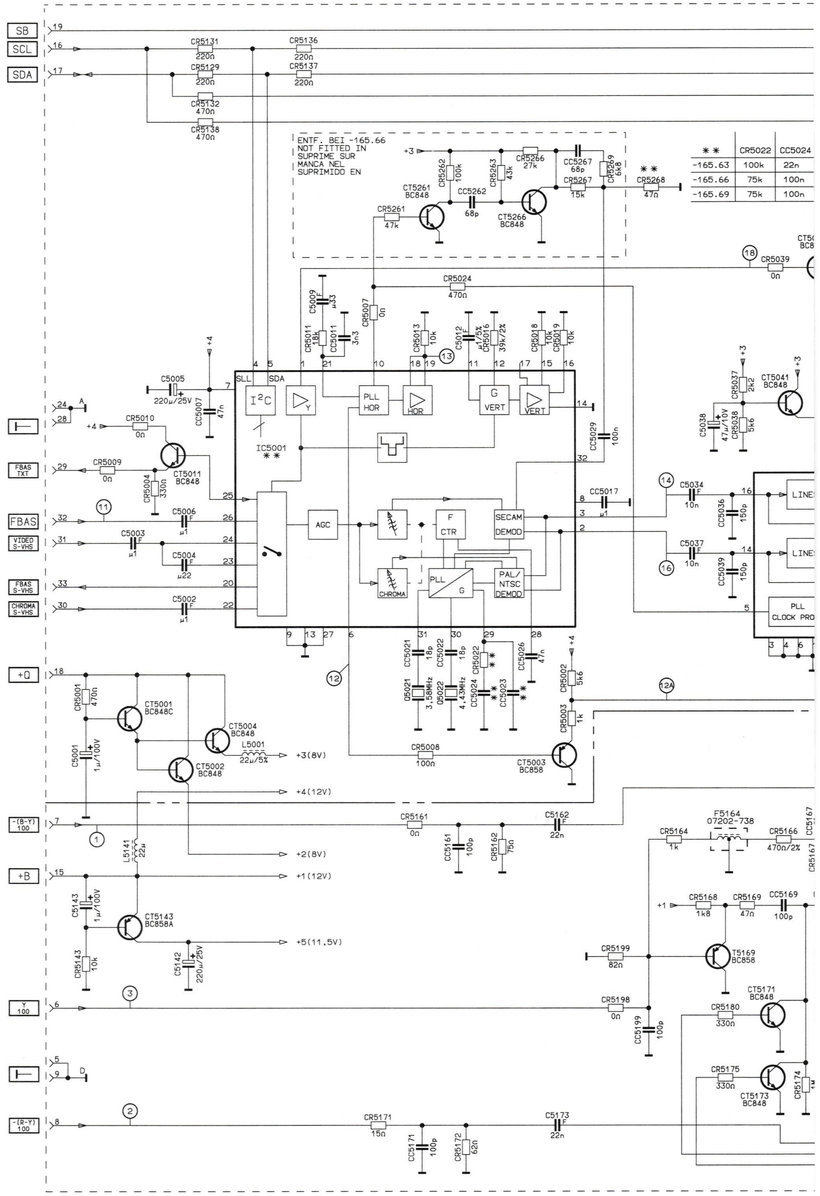

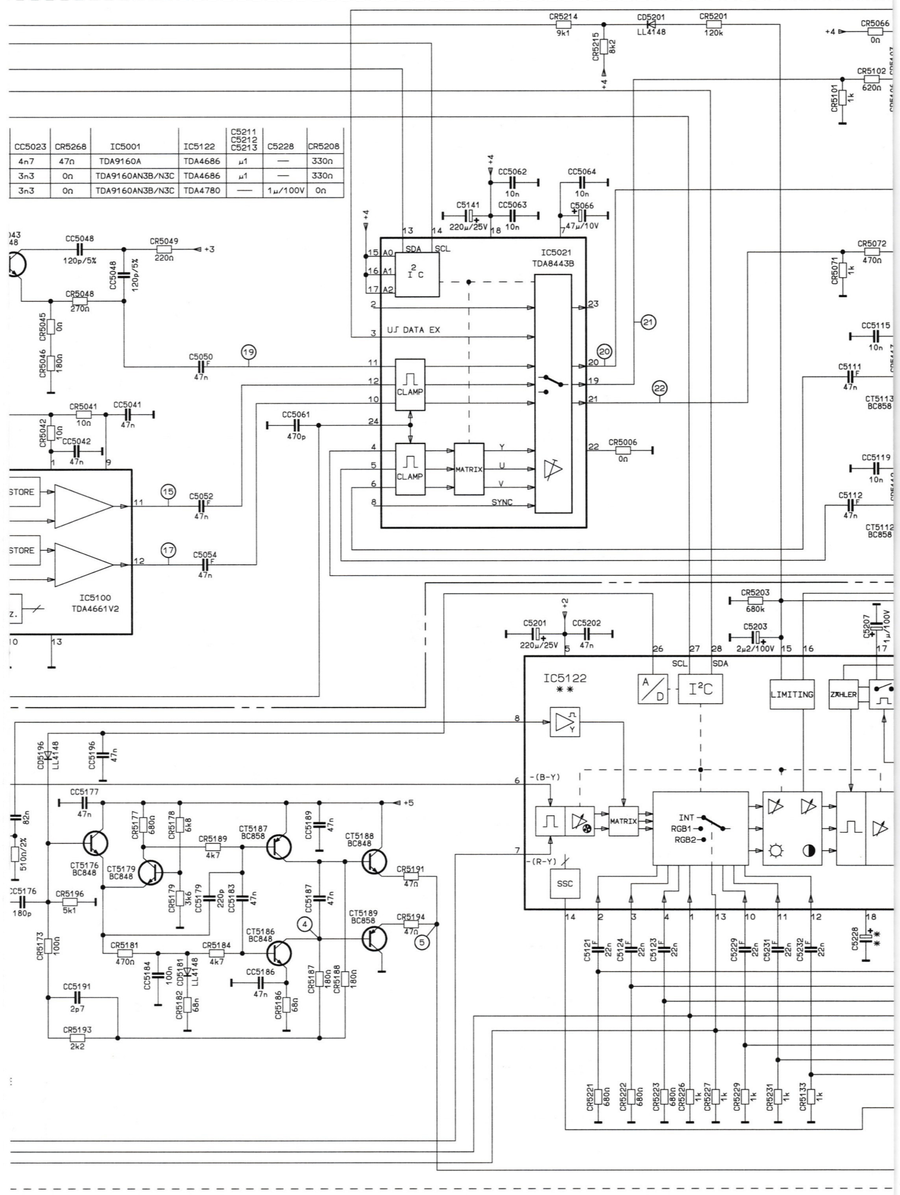

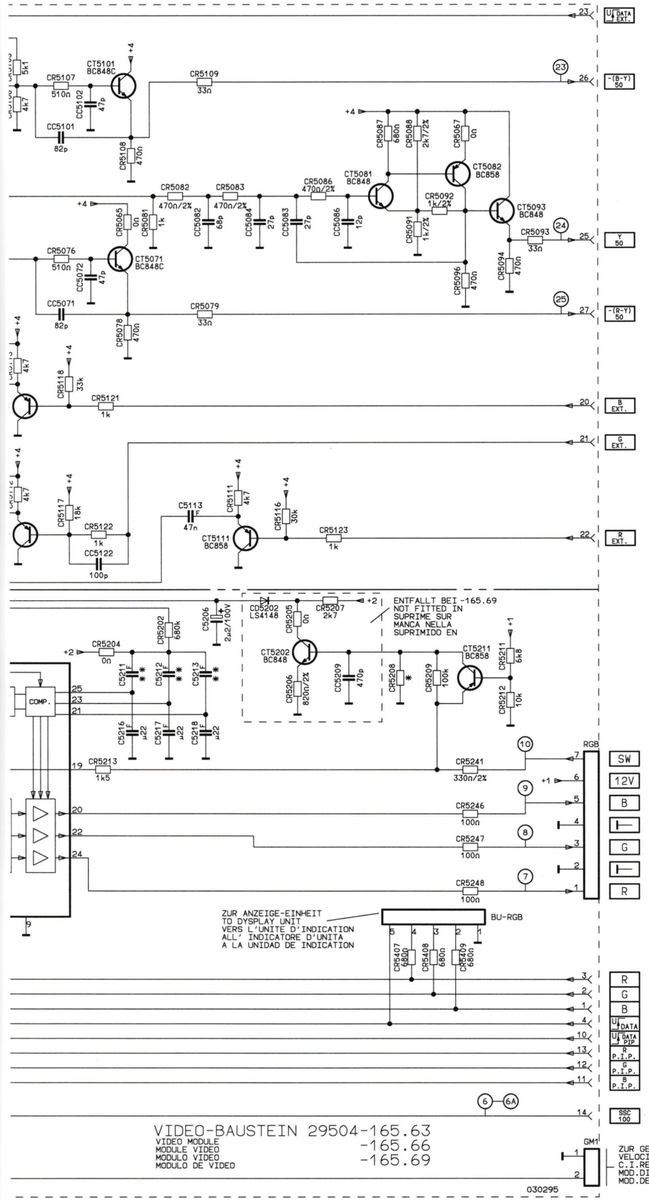

Sandcastleplatte / Sandcastle Board / Piastra Sandcastle

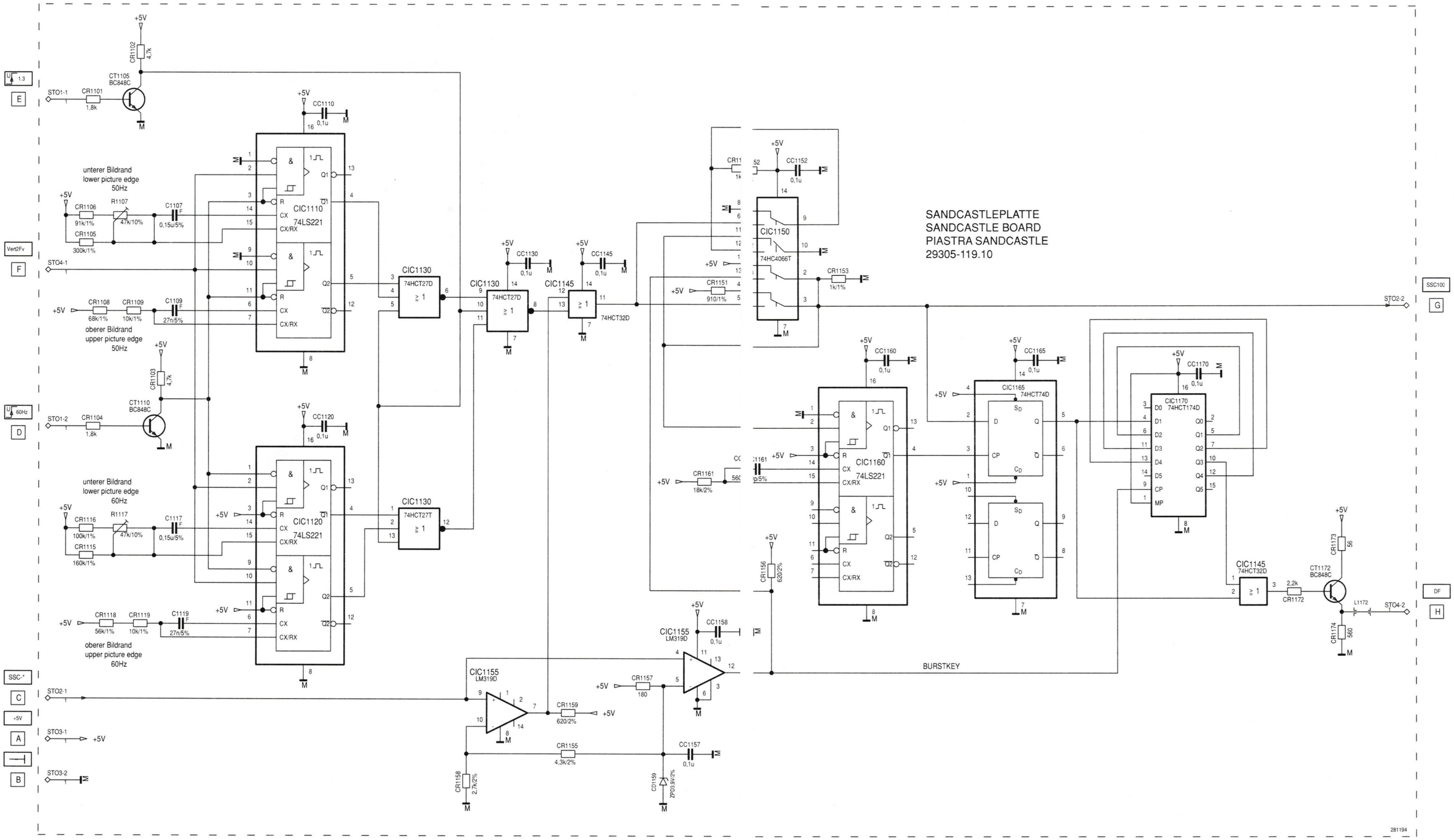

Geschwindigkeitsmodulator-Platte
Velocity Modulation Board
Piastra Modulatore di Velocita

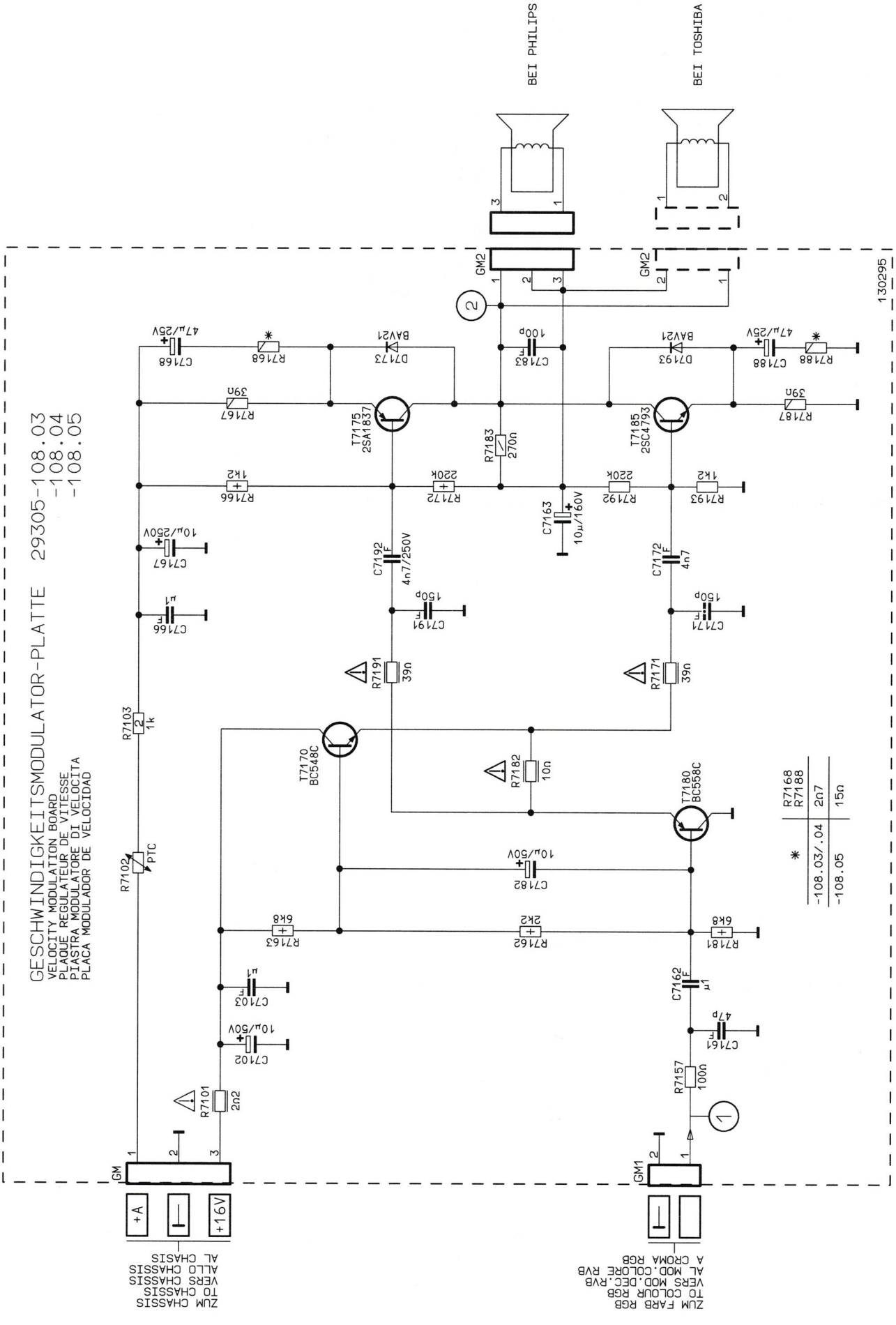

Fokussierungsplatte / Focusing Board / Piastra di Focalizzazione

Si image floue, retirer le condensateur C07 et le remplacer par deux 1.5N 6KV en série. Ces deux condos seront souvent à changer...

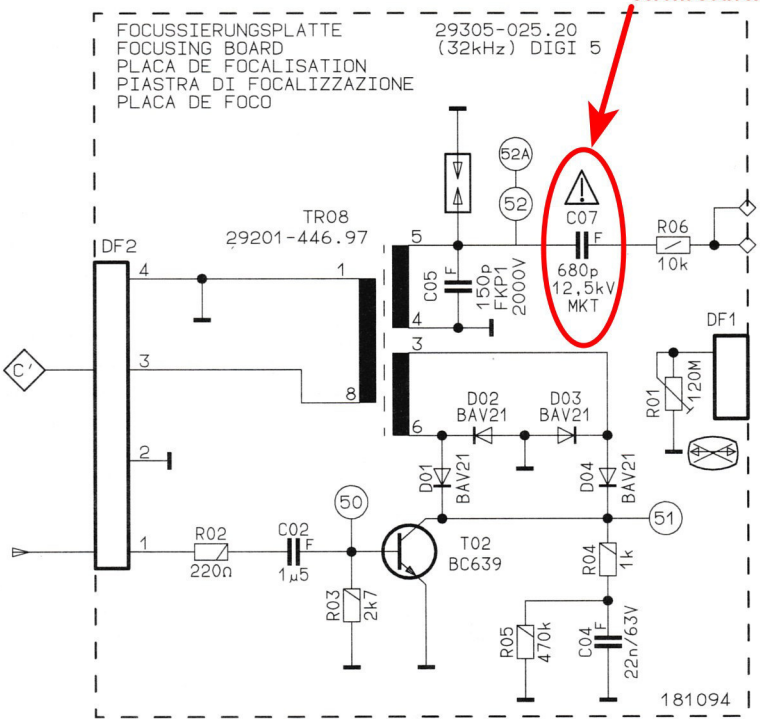

Ost/West-Baustein / East/West Module / Modulo Est/Ovest

100Vcc. Si defaut ligne > à 100Vcc

2Vcc. Si defaut trame = 0V

Sécurité ligne + trame > à 4.5V

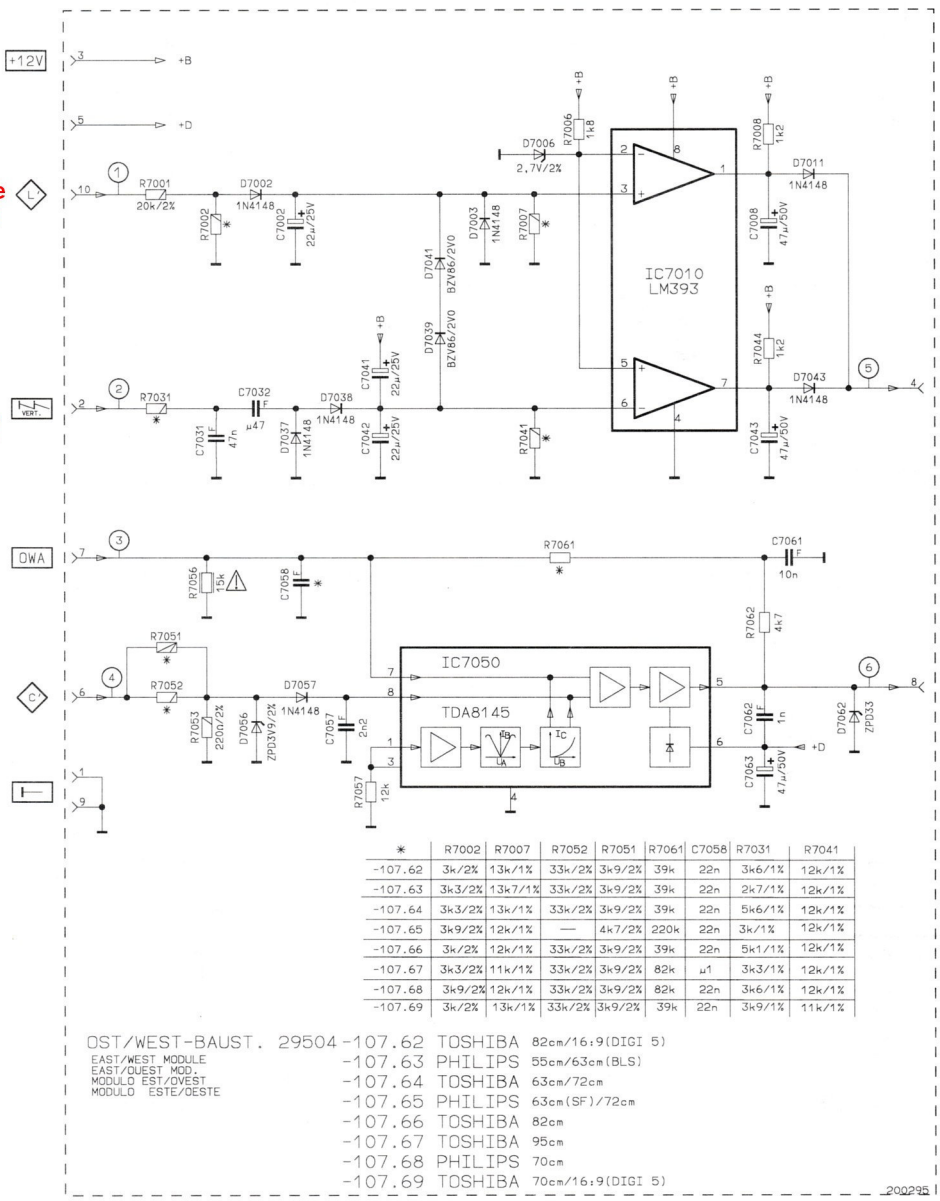

*	R7002	R7007	R7052	R7051	R7061	C7058	R7031	R7041
-107.62	3k/2%	13k/1%	33k/2%	3k9/2%	39k	22n	3k6/1%	12k/1%
-107.63	3k3/2%	13k7/1%	33k/2%	3k9/2%	39k	22n	2k7/1%	12k/1%
-107.64	3k3/2%	13k/1%	33k/2%	3k9/2%	39k	22n	5k6/1%	12k/1%
-107.65	3k9/2%	12k/1%	—	4k7/2%	220k	22n	3k/1%	12k/1%
-107.66	3k/2%	12k/1%	33k/2%	3k9/2%	39k	22n	5k1/1%	12k/1%
-107.67	3k3/2%	11k/1%	33k/2%	3k9/2%	82k	µ1	3k3/1%	12k/1%
-107.68	3k9/2%	12k/1%	33k/2%	3k9/2%	82k	22n	3k6/1%	12k/1%
-107.69	3k/2%	13k/1%	33k/2%	3k9/2%	39k	22n	3k9/1%	11k/1%

OST/WEST-BAUST. 29504 -107.62 TOSHIBA 82cm/16:9(DIGI 5)
EAST/WEST MODULE
EAST/OUEST MOD.
MODULO EST/OVEST
MODULO ESTE/OESTE
-107.63 PHILIPS 55cm/63cm(BLS)
-107.64 TOSHIBA 63cm/72cm
-107.65 PHILIPS 63cm(SF)/72cm
-107.66 TOSHIBA 82cm
-107.67 TOSHIBA 95cm
-107.68 PHILIPS 70cm
-107.69 TOSHIBA 70cm/16:9(DIGI 5)

200295

Buchsenplatte / Socket Board / Piastra Prese

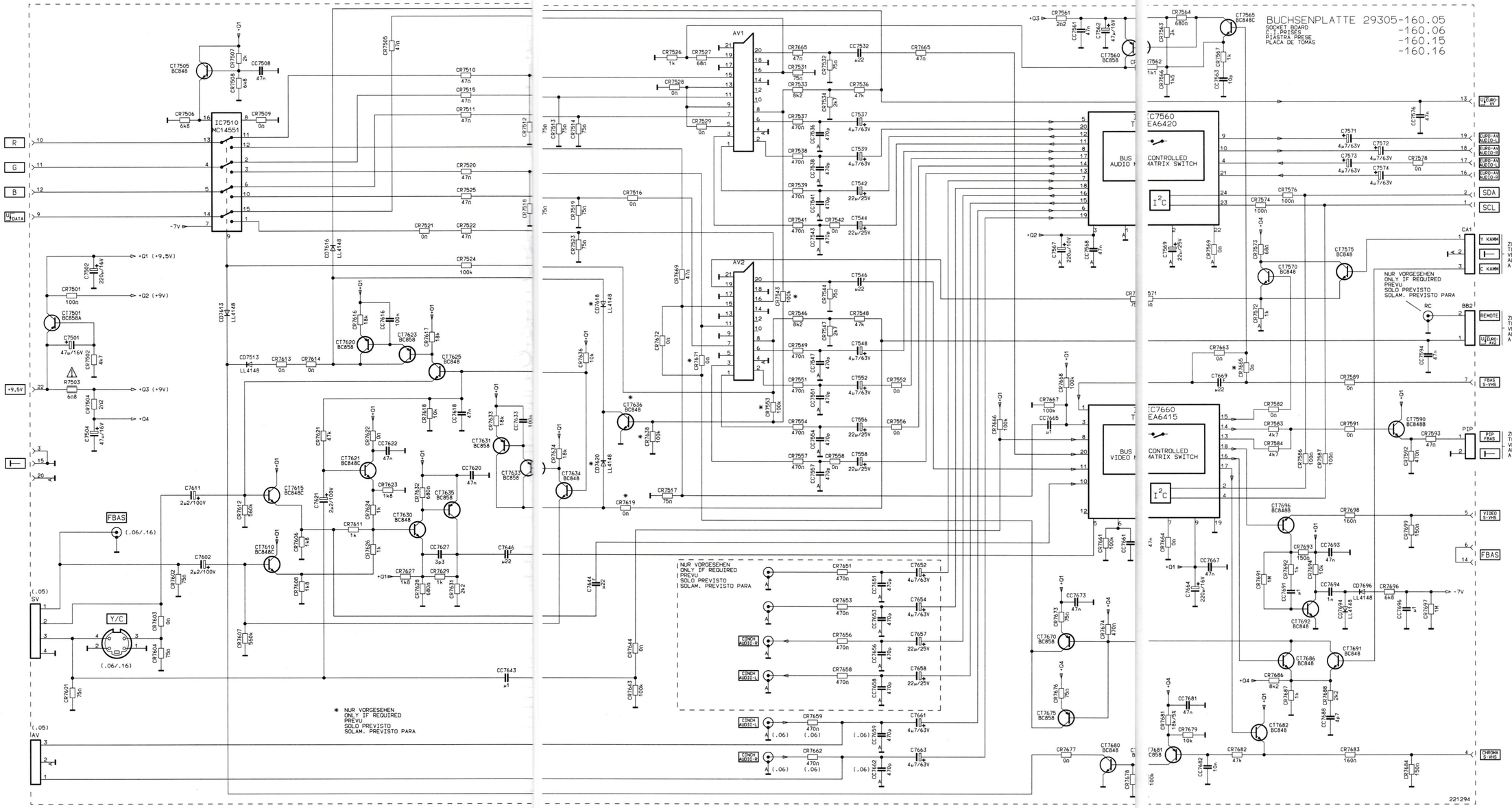

Entstörplatte
Interference Elimination Board
Piastra Antidisturbi

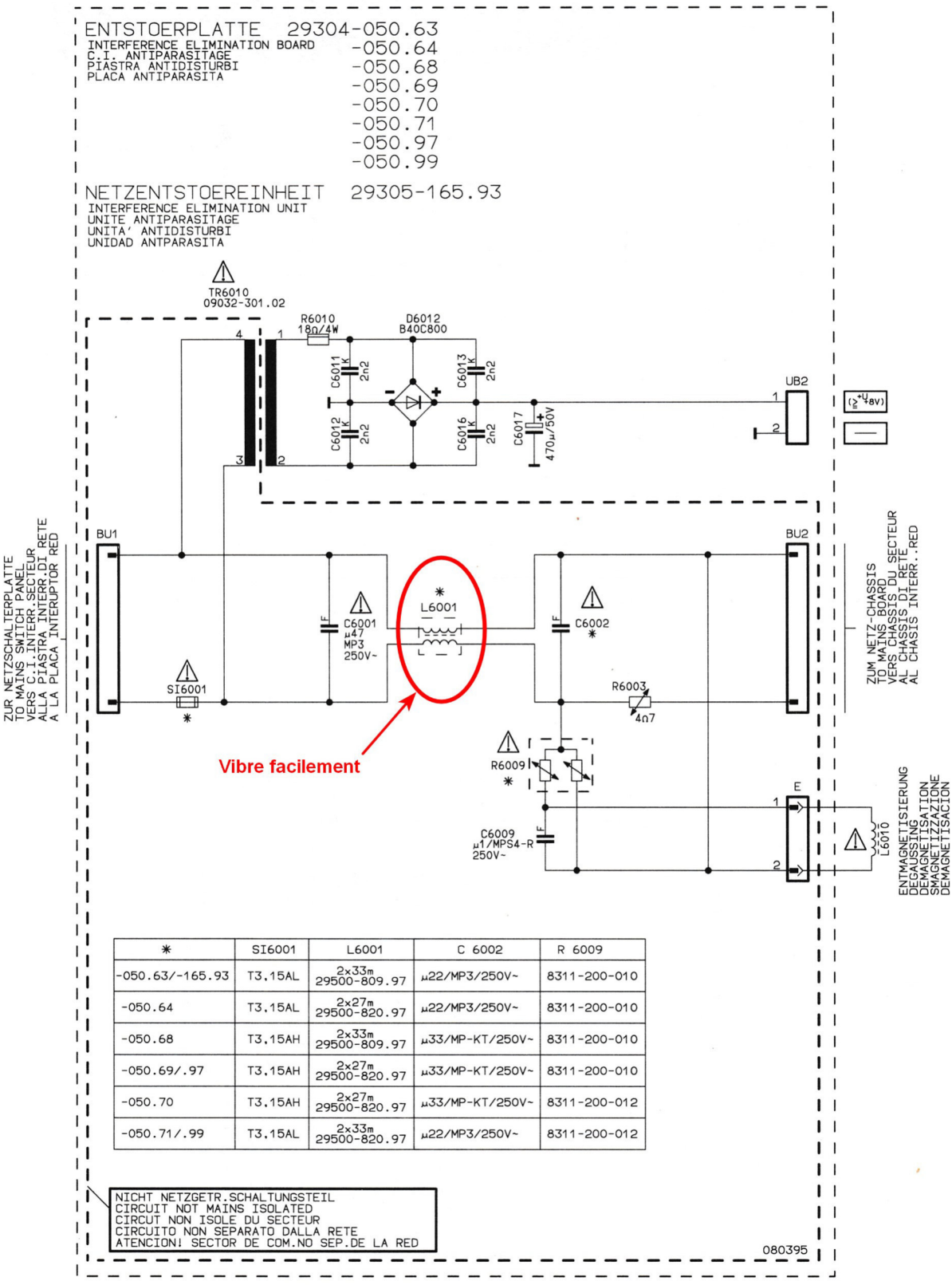

*	SI6001	L6001	C 6002	R 6009
-050.63/-165.93	T3.15AL	2x33m 29500-809.97	µ22/MP3/250V~	8311-200-010
-050.64	T3.15AL	2x27m 29500-820.97	µ22/MP3/250V~	8311-200-010
-050.68	T3.15AH	2x33m 29500-809.97	µ33/MP-KT/250V~	8311-200-010
-050.69/.97	T3.15AH	2x27m 29500-820.97	µ33/MP-KT/250V~	8311-200-010
-050.70	T3.15AH	2x27m 29500-820.97	µ33/MP-KT/250V~	8311-200-012
-050.71/.99	T3.15AL	2x33m 29500-820.97	µ22/MP3/250V~	8311-200-012

für M70-781

DRUCK -29304-540.63

Bildrohrplatte / CRT Panel / Piastra Cinescopio

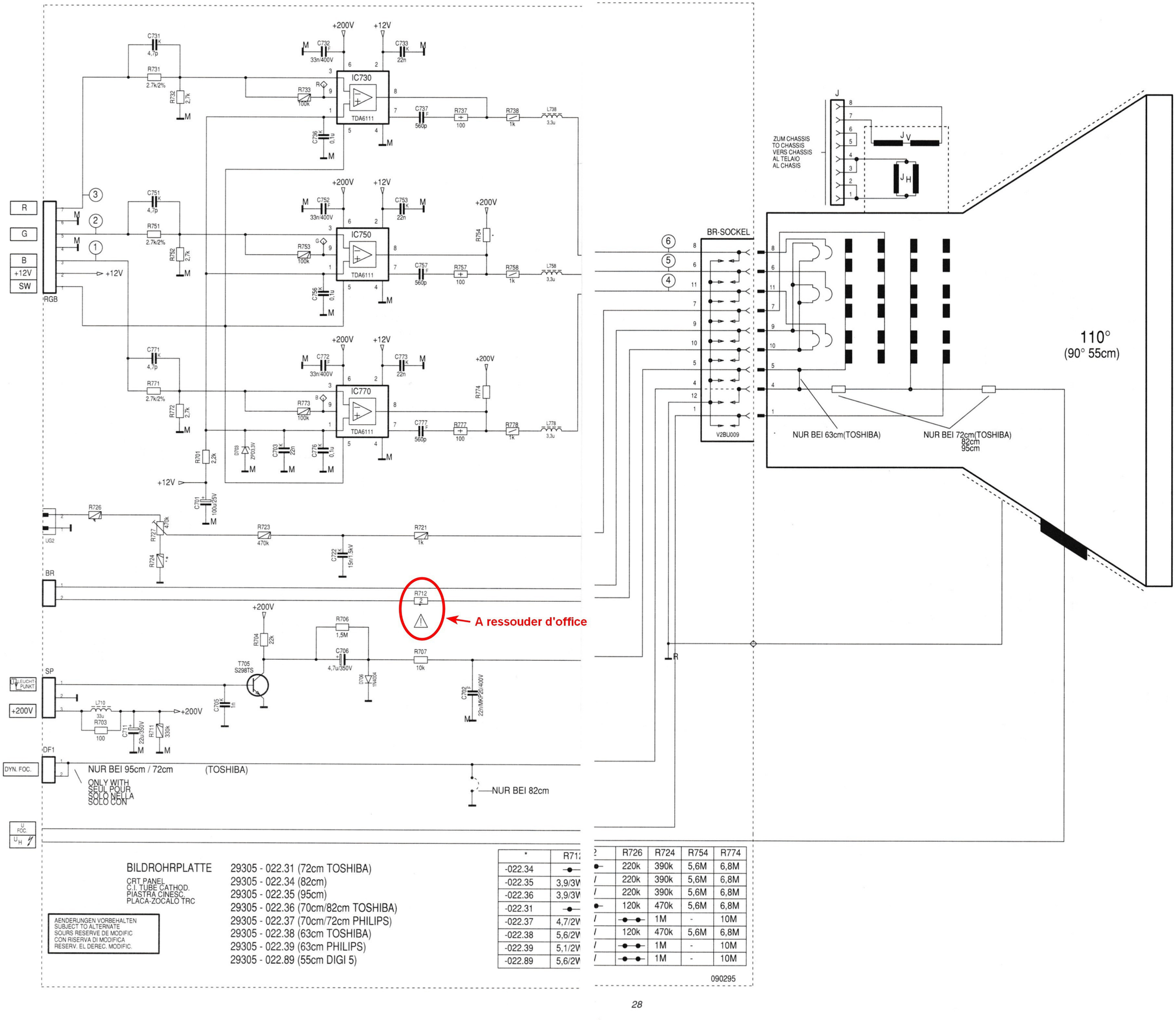

BILDROHRPLATTE

CRT PANEL
C.I. TUBE CATHOD.
PIASTRA CINESC.
PLACA-ZOCALO TRC

29305 - 022.31	(72cm TOSHIBA)
29305 - 022.34	(82cm)
29305 - 022.35	(95cm)
29305 - 022.36	(70cm/82cm TOSHIBA)
29305 - 022.37	(70cm/72cm PHILIPS)
29305 - 022.38	(63cm TOSHIBA)
29305 - 022.39	(63cm PHILIPS)
29305 - 022.89	(55cm DIGI 5)

AENDERUNGEN VORBEHALTEN
SUBJECT TO ALTERNATE
SOURS RESERVE DE MODIFIC
CON RISERVA DI MODIFICA
RESERV. EL DEREC. MODIFIC.

*	R71
-022.34	—●—
-022.35	3,9/3W
-022.36	3,9/3W
-022.31	—●—
-022.37	4,7/2W
-022.38	5,6/2W
-022.39	5,1/2W
-022.89	5,6/2W

?	R726	R724	R754	R774
●—	220k	390k	5,6M	6,8M
/	220k	390k	5,6M	6,8M
/	220k	390k	5,6M	6,8M
●—	120k	470k	5,6M	6,8M
/	—●—	1M	-	10M
/	120k	470k	5,6M	6,8M
/	—●—	1M	-	10M
/	—●—	1M	-	10M

NF-Verstärker / AF Amplifier / Amplificatore BF

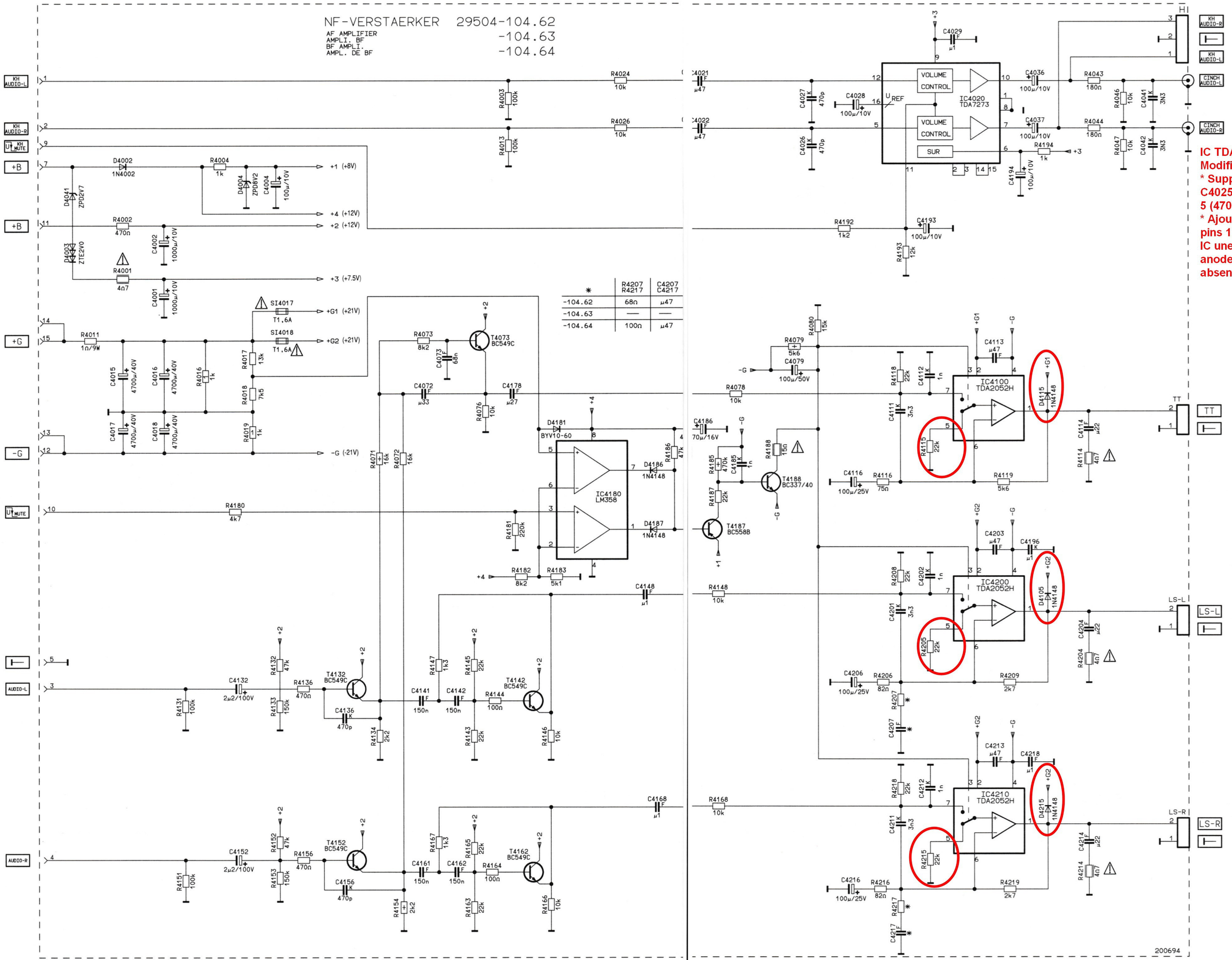

FERNBEDIENUNG 29622 - 059.01 / 29642 - 059.01
REMOTE CONTROL
TELE COMMANDE
TELECOMANDO
TELEMANDO

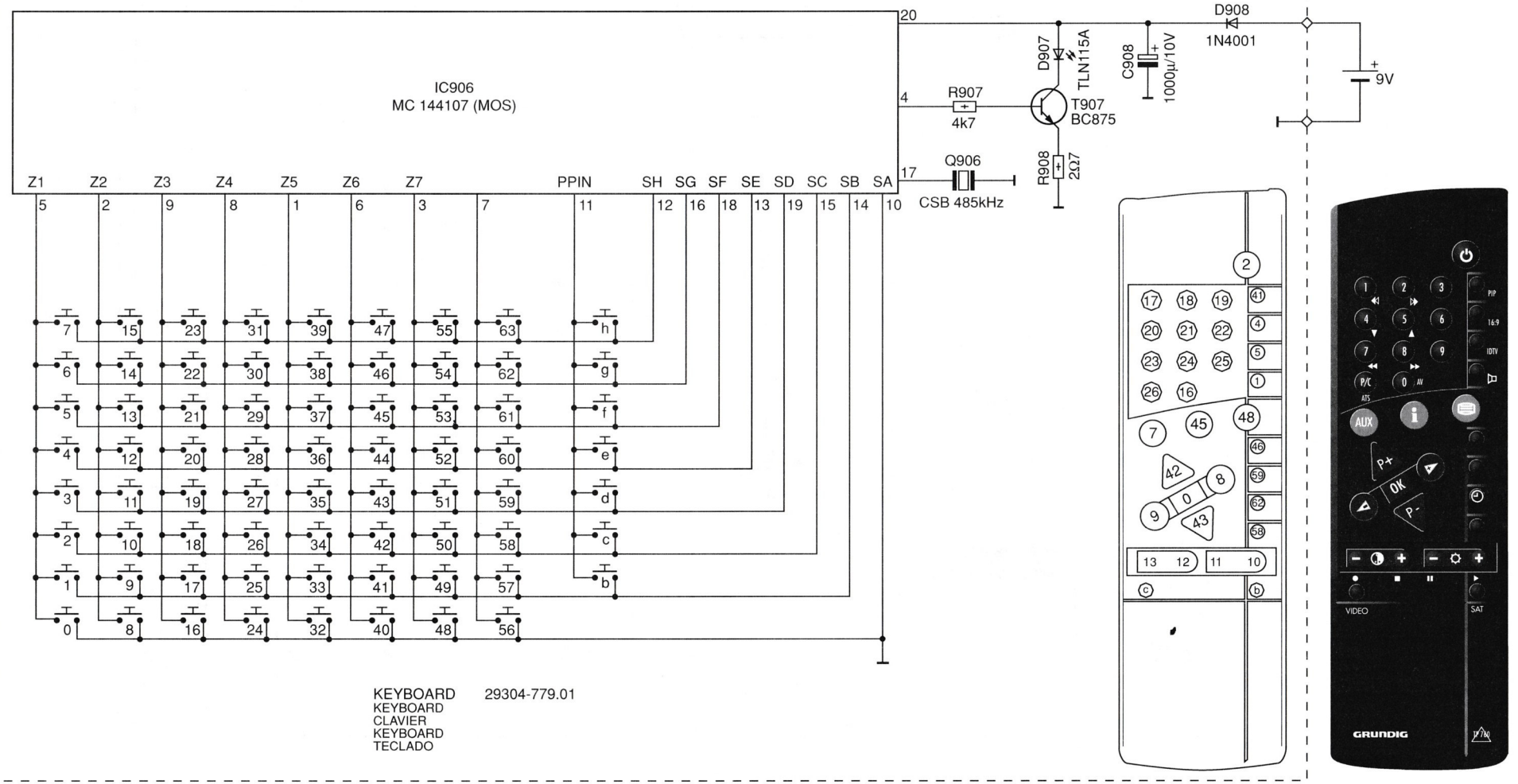

KEYBOARD 29304-779.01
KEYBOARD
CLAVIER
KEYBOARD
TECLADO

Matrix

Item	See Model	Book
X-Ray Precautions (See Notes)	Grundig G1000 Chassis	4
Service Notes (See Notes).	Grundig G1000 Chassis	4
AF Amplifier	Grundig CUC 7851	5
IF Amplifier	Grundig CUC 7861	5
Remote Control	Grundig CUC 6360	5

Recommended Safety Parts

Item	Part No.	Description
CUC 1951		
C 7	8531-505-221	MKT 680PF 20% 12,5KV
C 530	8660-098-219	SI-KERKO B-SS 220PF 20%
C 621, C 622	8660-098-238	SI-KERKO B-SS 2200PF 20%
C 665	8660-098-234	SI-KERKO B-SS 1000PF 20%
D 545	8309-215-045	DIODE 1 N 4148
K 536	29305-119,14	KASKADE BG 2034 642 3206
OK 636,OK 646	8306-000-012	OPTOKOPPLER CNY 17 F1
R 337	8705-279-107	MOW AX 0922-GA 27 KOHM
R 355	8766-302-087	MSW AX 0207 3,9 KOHM
R 371	8701-118-001	KSW SI B 1 OHM 5% -GA
R 408	8765-098-207	MSW AX 0207-GA 2 OHM
R 409	8765-098-208	MSW AX 0207-GA 1,8 OHM
R 414	8765-097-009	MSW AX 0204-GA 2,2 OHM
R 501	8705-221-225	MOW AX 0411-GA 10 OHM
R 502	8705-279-001	MOW AX 0922-GA 1 OHM
R 504	8735-064-039	DRW 4 39 OHM 5% STANDBY, 18
R 523	8705-269-065	MOW AX 0617-GA 470 OHM
R 524	8735-003-022	DW 0,22 OHM 10%
R 525	8735-003—33	DW 0,75W 0,33 OHM 10%
R 527	8730-280-021	DRWS11 7W 6,8 OHM
R 528, R 534	8705-221-225	MOW AX 0411-GA 10 OHM
R 551, R 552,R 553	8705-610-133	MOW AX 0617 330 KOHM 5%
R 571	8701-230-817	NKS 3 4,7 OHM 5% ROE
R 572, R573	8700-007-405	KSW AX 0207-GA 1,5 OHM
R 576	8705-269-015	MOW AX 0617-GA 3,9 OHM
R 577	8735-003-273	DRW 0,75W 1 KOHM 10%
R 622	8730-199-005	DRW 11ST 1,5 OHM 5% V3
R 623	8705-329-127	MOW LI 0411 180 KOHM 5%
R 663	8705-369-113	MOW LI0617 47 KOHM 5%
R 665	8766-349-155	MSW LI 0414 2,7 MOHM
R 667	8735-002-013	DRW 2 W 0,1 OHM 10%
R671	8705-329-321	MOW LI 0411 100 KOHM 10%
R 689	8705-369-079	MOW LI 0617 1,8 KOHM 5%
SI 331	8315-618-200	LOET-SI.-GR 1A/T
SI 630	8315-621-027	LOET-SI.-GR 2,5 A/T
SI 651, SI 661	8315-622-025	LOET-SI.-GR 3,15 A/T
SI 671	8315-623-008	LOET-SI.-GR 4 A/T
SI 6111	8315-613-027	LOET-SI.-GR 400 MA/T
TR 8	29201-447.97	FOKUSIERUEBERTRAGER
TR 501	09245-812.31	TREIBER-UEBERTRAGER
TR 526	29201-025.17	ZEILENTRAFO KPL
TR 651	29201-402.97	SPERRWANDLERTRAFO KPL
TR 6111	29201-385.97	UEBERTRAGER EF20
CUC 1982		
	29304-050.97	Mains Interference Unit
	09621-113.02	Fuse Holder
C 530	8660-098-219	SI-KERKO.B-SS 220PF 20%
C 621, C 622	8660-098-238	SI-KERKO B-SS 2200PF 20%
C 665	8660-098-234	SI-KERKO B-SS 1000PF 20%
C 6001	8511-793-047	MP 3 0,47 UF 20% 250VW
D 545	8309-215-045	DIODE 1 N 4148
K 536	8324-800-326	KASKADE BG 2034 642 3206
L 6001	29500-820.97	FUNKENTSTOERDROSSEL
OK637, OK646	8306-000-012	OPTOKOPPLER CNY 17 F1
R 337	8705-279-107	MOW AX 0922-GA 27 KOHM
R 355	8766-302-087	MSW AX 0207 3,9 KOHM
R 371	8701-118-001	KSW SI B 1 OHM 5% -GA
R 407	8765-044-049	MSW AX 0414-GA 100 OHM
R 408, R 409	8765-198-006	MSW 0207 1,6 OHM 1% TK 50
R 414	8765-097-009	MSW AX 0204-GA 2,2 OHM
R 501	8705-221-225	MOW AX 0411-GA 10 OHM
R 502	8705-279-001	MOW AX 0922-GA 1 OHM
R 504	8735-064-039	DRW 4 39 OHM 5% STANDB. 18
R 523	8705-269-065	MOW AX 0617-GA 470 OHM
R 524	8735-003-022	DW 0,22 OHM 10%
R 525	8735-003-033	DW 0,75W 0,33 OHM 10%
R 527	8730-280-021	DRWSI 7W 6,8 OHM
R 528, R 534	8705-221-225	MOW AX 0411-GA 10 OHM
R 551, R 552, R 553	8705-610-133	MOW AX 0617 330 KOHM 5%
R 571	8701-230-817	NKS 3 4,7 OHM 5% ROE
R 572, R 573	8700-007-405	KSW AX 0207-GA 1,5 OHM
R 576	8705-269-015	MOW AX 0617-GA 3,9 OHM
R 577	8735-003-273	DRW 0,75W 1 KOHM 10%
R 622	8730-199-005	DRW 11 ST 1,5 OHM 5% V3

Recommended Safety Parts Cont'd.

Item	Part No.	Description
R 623	8705-329-127	MOW LI 0411 180 KOHM 5%
R 663	8705-369-113	MOW LI 0617 47 KOHM 5%
R 665	8766-349-155	MSW LI 0414 2,7 MOHM
R 667	8735-002-013	DRW 2 W 0,1 OHM 10%
R 671	8705-329-321	MOW LI 0411 100 KOHM 10%
R 689	8705-369-079	MOW LI 0617 1,8 KOHM 5%
R 6009	8311-200-010	DUO-PTC
SI 331	8315-618-200	LOET-SI.-GR 1 A/T
SI 630	8315-617-006	FS.2,5 A/T L 250V
SI 651, SI 661	8315-622-025	LOET-SI.-GR 3,15 A/T
SI 671	8315-623-008	LOET-SI.-GR 4 A/T
SI6001	8315-622-503	FS.3,15 A/T H 250V
SI6111	8315-613-027	LOET-SI.-GR 400 MA/T
TR 8	29201-447.97	FOKUSIERUEBERTRAGER
TR501	09245-812.31	TREIBER-UEBERTRAGER
TR526	29201-025.17	ZEILENTRAFO KPL
TR651	29201-402.97	SPERRWANDLERTRAFO KPL
TR6010	09032-301.02	NETZTRAFO
WW.	29201-601.97	TRAFO NETZ
TR6111	29201-385.97	UEBERTRAGER EF20
WW. =Optional		
M 70-169/9		
	09246-188.31	Degaussing Coil
	09246-188.71	Degaussing Coil
	8300-066-697	Pict. Tube W 66 KZA 696X99
	29305-165.04	Power Switch Unit
	29703-291.32	Power Switch
	29303-452.02	Mains Plug Lower Part
	09621-113.02	Fuse Holder
	8290-991-307	Power Cable
C 6001	8511-793-047	MP 3 0,47 UF 20% 250VW
C 6002	8511-793-033	MP 3 0,22 UF 20% 250VW
L 6001	29500-820.97	FUNKENTSTOERDROSSEL
R 6009	8311-200-010	DUO-PTC
SI 6001	8315-622-003	FS.3,15 A/T L 250V
TR6010	09032-301.02	NETZTRAFO
WW.	29201-601.97	TRAFO NETZ
WW. = Optional		
M 82-169/9		
	09246-120.71	Degaussing Coil
	8300-076-690	Pict. Tube W76 KYR 690X96
	29303-452.02	Mains Plug Lower Part
	29703-291.32	Power Switch
	8290-991-307	Power Cable
R 6000	8765-049-157	MSW AX 0414-GA 3,3 MOHM

Service Adjustments

Service and Special Functions

1: Switching-on Options
Initialisation of the µP (IC850)

Connect Pin 1 of the processor to chassis and switch the TV on with the mains switch to load the EEPROM in the processor IC850.
Display: "CONFIG" bzw "CO".
After replacement of IC840 the ATS (see ATS EURO Plus) must be re-started.

Loading the Average Values/Emergency Data (ROM Data)

If µPIC850 fails (is replaced) or the data has been changed, the TV receiver must be switched on with the emergency data set.
Mains button "ON" and press the **P-** button on the local keyboard simultaneously —> ROM data are loaded. In doing so the following data are read out from IC860:

- white value blue, green and white balance. picture geometry and deflection.
- TV set up (switching on with programme / AV, frequency-channel mode, PIP frame colour, PIP position).
- national identification of the location.
- volume offset.
- last programme.
- analog average values and the Luminance Delay ("0") and loaded into RAM memories of IC850.

Having entered the individual values via the Info. Menu they will be stored automatically when switching off (see alignment).

ATS Reset

Mains button "ON" and press the **L+** button on the local keyboard.

- default values are loaded.
- either optimum analog values of the factory
- or, analog values from the EPROM.
- This option activates the ATS function the next time the receiver is switched on. The previously stored programmes (channels) are cancelled.
- Black Stretch on (if provided)
- Cinema Picture Format.

ATS Start

Pressing the button "P/C" (for approx. 4 secs.) —> and confirming "Restart" or "Update" with "OK" —> starts the Auto Tuning System (ATS). The ATS-system determines the VPS-signal for the station identification. Additionally, for the programmes 1 - 99, the volume offset is reset and the optimum values, Colour Match and Picture Sharpness are stored together with the Peri-bit for the respective country.

I²C-Bus, IC Test, (for fault finding in the I²C-Bus) These error messages refer only to interference's in the I²C-bus, that is modules which do not return an Acknowledge bit via the I²C-bus. For example no operating voltage present on the module, break in the circuit path or defective I²C-interface.

Service-Mode Programme for Sets with Display

Mains button "ON" and press the **P+** button on the local keyboard simultaneously = I²C-Bus Test.
With this diagnostic programme the microprocessor in the control unit interrogates the modules connected to the I²C-Bus and indicates defective modules by an error message or a code number on the display and LED, respectively.

List of Error Messages and Code Numbers:

Interface	Error Code	Defective Module
NVM Control Unit	E0, E1,E2, E3	IC840, Control Unit
Box DDC	E4	IC1410, Feature Box
Box MSC	E5	IC1455, Feature Box
Box CSG	E6	IC1430, Feature -Box
Box PP	E7	IC1550, Feature-Box
Box DP	E8	IC1560, Feature-Box
Colour Dec RGB Chip	E9	IC5122, Video Module
IF Stereo Sound IC	EA	IC2250, IF Amplifier
TDA 8443	EC	IC5021, Video Module
TDA 9160	EE	IC5001, Video Module
ATA Tuner PLL	EF	CIC2140, Tuner
Tuner NVM	EH	CIC2100, Tuner
Audio Matrix TEA6420	EL	IC7560, Socket Board
Video Matrix TEA6415	EP	IC7660, Socket Board

The **L+** button can be used to discover other defective interfaces.

Service-Mode Programme for sets without Display

Mains button "ON" and press the **P+** button on the local keyboard simultaneously = I²C-Bus Test.

In this fault finding programme, the microprocessor on the tuning module (control unit) scans the individual modules connected to the I²C-Bus and indicates them as countable pulse sequence (see fig 1).

1:Connect a double-beam oscilloscope to I²C-Bus, trigger "SCL" on the oscilloscope.
2:Press and hold **P+** on the keyboard and switch on with the mains button. The number of clock pulses indicates the defective module as shown in the table. If there is no fault in the I²C-Bus communication the pulses SDA and SCL cannot be synchronised on the screen.

Interface	Number of Clocks	Defective Module
NVM Control Unit	1, 2, 3, 4	IC840, Control Unit
Box DDC	5	IC1410, Feature-Box
Box MSC	6	IC1455, Feature-Box
Box CSG	7	IC1430, Feature-Box
Box PP	8	IC1550, Feature-Box
Box DP	9	IC1560, Feature-Box
Colour Dec RGB Chip	10	IC5122, Video Module
IF Stereo Sound IC	11	IC2250, IF-Amplifier
TDA 8443	12	IC5021,Video Module
TDA 9160	13	IC5001, Video Module
ATA Tuner PLL	14	CIC2140, Tuner
Tuner NVM	15	CIC2100, Tuner
Audio Matrix TEA6420	16	IC7560, Socket Board
Video Matrix TEA6415	17	IC7660, Socket Board

2: Settings via the Info. Centre Menu

Programme Lock (security system)

You can cancel your personal code number by pressing **+** , **-** , ▼, ▲ sequentially.

EPROM Version Number

The version number can be called up in the Menu Info. Centre with the "AUX" button. The index 01 of the part number (19798-277.01) indicates the EPROM version.

Switch on with Programme "1" or "AV"

Via the Menu Info. Centre —> Special Functions —> Settings programme —> AV. When switching power "On", programme position "AV" has priority.

On-Place/Two-Place Programme Selection

Via the menu Info Centre —> Special Functions —> Settings Programme selection can be switched over between 1 - 9 and 1-99.

Volume Offset

Via the Menu Info. Centre —> Special Functions —> Settings —> the "Volume" level can be changed in 16 steps on a pre-programme basis.

Colour Match

Via Menu Info. Centre —> Special Functions —> Settings —> the "Colour Match" can be changed in 8 steps on a pre-programme basis.

Station Ident

Via the Menu Info. Centre —> Special Functions —> Settings —> the station ident can be switched off, displayed for a short period or continuously on the screen.

OSD-ON/OSD/OFF for all Programmes

The on screen display can be switched "on" or "off" via the Menu Info. Centre —> Special Functions —> Settings —> Pict/Sound Options. When selecting the "off" option the scales for the analog values is switched off.

RGB-Sync-Level

Via the Menu Info. Centre —> Special Functions —> Settings —> the RGB-Sync-Level can be changed to On or Off.

PIP-Menu

Via the Menu Info. Centre —> Special Functions —> Settings —> the frame colour and small picture position can be selected.

Maximum Programme Number

Via the Menu Info. Centre —> TV-Station Table —> OK. When storing the channel number "00" at any programme position, programme selection with the ▼, ▲ , buttons is limited to the numbers lower than this position.

3: Settings via the Audio Menu

Hi-Fi-output off, linear, controlled

Via Audio Menu 🔊—> Hi-Fi-output and the **-** / **+** buttons the AF at the Hi-Fi-output can be:

- switched "off" normal operation.
- set to "var", the volume level of the Hi-Fi system can be varied via the remote of the TV. The loudspeakers in the TV receiver are switched off in

Service Adjustments Cont'd

this case.
- switched to "lin", the volume level of the Hi-Fi-system is constant.

Switching Over the Sound: Stereo, Mono, FM, NICAM, NICAM B

Select Audio Menu —> Sound. With the - + buttons switch the stereo decoder over to the desired reception.

FM - sound stereo broadcast:
- switchable between Stereo <—> Mono.
- Two-channel sound: switchable between Mono A <—> Mono B.

The sound for the loudspeakers and headphones can be switched over independently of each other.

NICAM - sound mono broadcast:
- switchable between NICAM-Mono <—> FM

NICAM - sound stereo broadcast:
- switchable between NICAM-Stereo <—> FMo

NICAM - sound dual-sound broadcast:
- switchable to NICAM-sound 1 —> NICAM-sound 2 —> FM

NICAM not relating to the picture:
- switchable to NICAM-sound 1 —> NICAM-sound 2 —> FM- preferred sound is FM-Mono

AV mode
- Stereo (preferred setting) —> Mono A —> Mono B.
- With the options Sound 1 and Sound 2, the sound for the loudspeakers and headphones can be switched over independently of each other.

Headphones dual-sound broadcast:
- switchable between Sound 1 <—> Sound 2

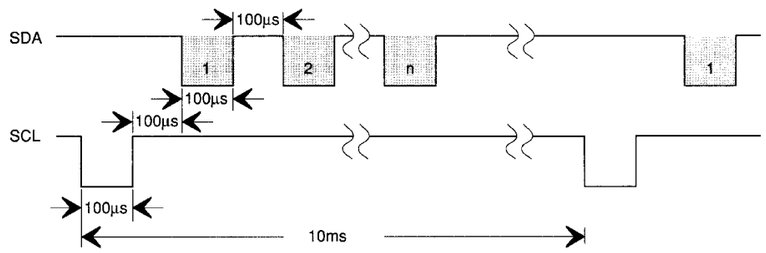

Fig 1.

4: Settings via the Station Ident

Settings entered in the station identification effect forced switching of the TV set to an operating mode; as a result, the automatic evaluation function is suppressed.
Select the Menu Info. Centre —> TV-Station Table.
Activate the desired TV station and enter a comma at the 4th place from the left. The places 5 and 6 are reserved for the actual switching information (see table).
The first three places (from the left) of the station ident may be filled with any characters.
Example: **ARD, MO** only mono sound.

The final setting of the station ident shows only the first three places, the switching information will not be indicated.

Indication: **ARD.**

Possible switch settings:

station ident	XXX, MO	->	forced mono
station ident	XXX, 2T	->	sound 2 select (preferred with dual-sound broadcasts)
station ident	XXX, AF	->	AFC- Nachregelung aktiv
station ident	XXX, AV	->	VCR time constant and AFC
Senderkennung	AV...	->	VCR time constant and AFC
station ident	XXX, P5	->	50Hz
station ident	XXX, N5	->	50Hz
station ident	XXX, S5	->	0Hz
station ident	XXX, P6	->	60Hz
station ident	XXX, N6	->	60Hz
station ident	XXX, S6	->	60Hz

5: Settings via the "AUX" Function

The "AUX" command initialises an input mode in which certain commands are interpreted differently. This mode remains active for about 4 secs. unless another command is entered. The indication "AUX" is shown on the screen for about 4 secs.

Setting the Peri Bit

"AUX" —> 0/AV.
With the Peri Bit set, the control processor evaluates the switching voltage on Pin 8 of the EURO-AV socket AV1 (black) and switches the TV receiver to this input, (eg. on descrambler operation).
The Peri symbol illuminates in the display of the keyboard unit.

Switching over the Descrambler

Descrambler off
Descrambler on Auto (Peri Bit set)
Descrambler on Stereo (Peri Bit set)
Descrambler on mono - L (Peri Bit set)
Descrambler on mono - R (Peri Bit set)

Copy Function
In operating mode:
Firstly select the AV signal source, eg. AV1, AV2 etc.
- ON: "AUX" —> 0/AV (indication "Copy On")
- OFF: "AUX" —> 0/AV (no indication)

Copying possibilities from —> to:

- AV1 (black Scart socket) —> AV2 (orange Scart socket).
- AV2 (orange Scart socket) —> AV1 (black Scart socket).
- AV3 (S-Video and Cinchbuchse) —>AV2 (orange Scart socket).
- AV3 (S-Video and Cinchbuchse) —>AV1 (black Scart socket).

Headphone Volume Control

The headphone volume level can be changed by ""AUX"" —> **- +**.

Switching between Mono —> Stereo Sound

"AUX" —> activates the sound switching function: Mono —> Stereo —> Mono A —> Mono B etc.

6: IR-Data Programmer

With this menu and the IR-Data Programmer 2, it is possible to store a maximum of 99 programme positions with the data for the channel, TV norm, Peri, 6-place station identification, the fine tuning centre frequency and the volume offset "0".
The Programmer AP transfers only channels and 4-place station identifications with fine tuning centre frequency and volume offset "0".
Call up via the Menu Info. Centre —> Special Functions —> IR-Data Programmer.

Attention: The data transfer can be affected by interference's from electrical lighting fixtures.

7: Setting the Analog Values

When exceeding the minimum possible values for the brightness, colour contrast, B/W-contrast and volume level as specified in the table below, the appropriate optimum value is initialised when switching the TV on or changing from RF —> AV.

	Minimum Value	Optimum Value
Brightness	15	31
Colour contrast	11	32
B/W contrast	15	31
Volume	11	11

Alignment
All adjustment controls not mentioned in this description are pre-set at the factory and must not be re-adjusted in the case of repairs.

1. Chassis Board

Measuring instruments:
Dual-channel oscilloscope.
10:1 test probe.
Digital voltmeter.

Service works after replacement or repair of the following modules:
Chassis: alignment **1.1**
Tuner, IF amplifier: alignment **1.2, 1.3**
Display/Control Unit: alignment **1.2...1.13**
Video Module: **1.5**

1.1: Alignment:
+A voltage
+B voltage
+N voltage
+F voltage

Preparation
Brightness: Minimum
These voltages must be checked after every repair and before every adjustment.

Alignment Process
Set control R654 to 150V.
Set control R673 to 12V on contact 36 of the Feature-Box.
Set control R683 to 5V on contact 32/33 of the feature-Box.
Set control R697 to 5V on contact 9/10 of the Feature-Box.

1.2: Alignment
Tuner-AGC Automatic

Preparation
Feed in a standard test pattern in the upper range of the UHF band; the RF must be ≥1.5mV (64dBm V, noise-free picture) at least.
Infocenter —> Special Functions —> Service —> Code 8500 —> Tuner AGC —> Automatic.

Alignment Process
The control processor IC850 will set the optimum value for the delayed gain control voltage. Activate with button **"OK"**.

1.2 (ii): Alignment
Tuner-AGC Manual.

Preparation
Feed in a standard test pattern in the upper range of the UHF band; the RF must be ≥1.5mV (64dBm V, noise-free picture) at least.
Infocentre —> Special Functions —> Service —> Code 8500 —> Tuner-AGC —> Manual.
or
Digitalvoltmeter: Tuner-Contact 9.

Alignment Process
Press "OK". With buttons **- +** tune the TV station so that noise just starts to appear on the picture. Then tune in reverse direction until the picture just becomes noise free. Store with "OK"
With buttons **- +** adjust ≥3.3V.

1.3: Alignment
(i) AFC-Reference Automatic

Preparation
Infocentre —> Special Functions —> Service —> Code 8500 —> AFC-Reference Æ Automatic.
Tune to a local station on a channel as low as possible at the desired programme position with standard channel spacing without fine tuning.

Alignment Process
On activation of AFC Reference Automatic a rectified IF-voltage is measured at the AFC output of the IF amplifier which is used on station search as a comparative value for VCR-HF playback (station identification "AV") to readjust the modulator drift.
Activate with **"OK"**

(ii): AFC-Reference Def. Value.

Preparation
Not for Servicing.

Alignment Process
The AFC Reference Def. Value contains only average values stored during production.

1.4: Alignment
Text RGB-Level

Preparation
Infocentre —> Special Functions —> Service —> Code 8500 —> Text RGB-Level.

Alignment Process
Change the value with buttons **- +** to "Full level" or "Half level".

1.5: Alignment
White balance.

Preparation
Black Stretch "off" (Picture Menu).
Infocentre —> Special Functions —> Service —> Code 8500 —> White balance.

Alignment Process
With the **- +** buttons set the VG (amplification green) and VB (amplification blue) values so that the white rectangular area in the middle of the picture becomes achromatic.
Store with **"OK"** .

1.6: Alignment
Bottom flutter gate.

Preparation
Connect the video recorder and play back the recording.
Infocentre —> Special Functions —> Service —> Code 8500 —> Bottom flutter gate.

Alignment Process
With the **- +** buttons adjust for minimum flutter at the top or bottom picture edge.

1.7: Alignment
Type of picture tube.

Preparation
Infocentre —> Special Functions —> Service —> Code 8500 —> Tube type.

Alignment Process
With the **- +** buttons select T82/16:9 or T70/16:9.

1.8: Alignment
Video processor

Preparation
Infocentre —> Special Functions —> Service —> Code 8500 —> Video processor.

Alignment Process
With the **- +** buttons switch the Video processor to TDA 4686 or TDA 4780 which may be fitted to the TV set. TDA 4780 contains the features for Black Stretch, Blue Stretch and Gamma Control.

1.9: Alignment
RGB Sync-level.

Preparation
Infocentre —> Special Functions —> Service —> Code 8500 —> RGB Sync-level.

Alignment Process
In RGB operation it is possible to set the RGB level to "on" or "off" with the buttons **- +** to eliminate line tearing for example in this mode.

1.10: Alignment
VM (Velocity Modulation).

Preparation
Infocentre —> Special Functions —> Service —> Code 8500 —> Velocity Modulation.
Alignment Process
With the **- +** buttons switch the Velocity Modulation on or off.

1.11: Alignment
Picture Sharpness.

Preparation
Infocentre —> Picture Menu —> Sharpness.

Alignment Process
Adjust with **- +** buttons for optimal picture sharpness.

1.12: Alignment
Colour Match.

Alignment Process
Infocentre —> Special Functions —> Settings —> Colour Match.

1.13: Alignment
Picture Geometry.

Preparation
Infocentre —> Special Functions —> Service —> Code 8500 —> Geometry.
Feed in a test generator pattern or a standard test pattern in 16:9 format via the aerial or use the integrated test pattern. Feed in the geometry test pattern in Cinema mode.

Attention:
The "Line Shift" alignment influences the line phase. Before this adjustment, set the horizontal amplitude to minimum and if necessary correct the raster position with the "Shift Plug".

Reset:
The "Reset" menu contains:
either the optimum picture geometry data entered during production or the average data set read out from the ROM if the TV is switched on with the emergency data set. If the TV has been adjusted wrongly, these basic values can be loaded at any time as follows:
Call up Infocentre —> Special Functions —> Service —> Code 8500 —> Geometry —> Reset and confirm with **"OK"**.

Alignment Process
Via the menu, select the geometry values for the vertical deflection, then set the values for the horizontal deflection, first at 50Hz then at 60Hz field frequency. Now with **-** or **+** button, move the picture into the centre of the raster. Re-adjust the horizontal amplitude according to the test pattern.

Store:
Call up "End without memory" and change with the button **-** or **+** to "End with memory".
Store the setting with the **"OK"** button.

Whenever the TV is switched on the picture geometry is set to the value stored last.

1.14: Alignment
Adjustment of the bridge coil L573.

Preparation
Infocentre —> Special Functions —> Service —> Code 8500 —> Geometry.
Set the horizontal amplitude (width) to minimum.
Connect channel 1 of the oscilloscope to the collector of the transistor T572.
Connect channel 2 of the oscilloscope between diodes D571 and D572.

Alignment Process
Set the coil L573 so that the pulse width of both oscillograms is the same.

1.15: Alignment
Line Sharpness.

Preparation
Select the convergence test pattern:
Contrast to maximum, set the brightness so that the black background of the test pattern is just brightening.

Alignment Process
With focus control on the CRT panel adjust the horizontal lines for maximum sharpness.
Subsequently, with the focus control on the focusing panel, adjust the vertical lines for maximum sharpness. Repeat.

Attention:
For measurements on the focusing panel use only sufficiently insulated measuring cables and test probes with adequate electric strength (eg. 100:1).

2: Picture Tube Panel

Measuring instruments:
Oscilloscope with 10:1 test probe, high resistance voltmeter.
Service works after replacement or repair of the picture tube panel:
Alignments no. 2:1 and 2:2.

Service Adjustments Cont'd.

2.1: Alignment
White balance.

Preparation
Black Stretch set to "off" (Picture Menu).
Infocentre —> Special Functions —> Service —> Code 8500 —> White Balance.

Alignment Process
With the **-** + buttons set the VG (amplification green) and VB (amplification blue) values so that the white rectangular area in the middle of the picture becomes achromatic.
Store with **"OK"**.

2.2: Alignment
Screen grid voltage.

Preparation
- Feed in the test pattern.
- Switch the TV receiver to AV mode.
- Adjust the screen brightness with the remote control handset so that the grey areas just become dark.
- Connect the voltmeter (200 kW series resistance) to the test points R,G,B to determine the test point with the highest voltage level.
- Oscilloscope: measured test point.

Alignment Process
With the control **SG** on the picture tube panel set the voltage to 162.5V±2.5V.
If flyback lines are visible on the screen reduce the voltage by 10V approximately.

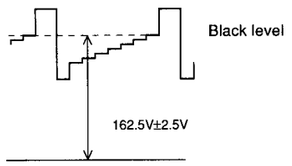

Fig 2.

East West Diagram

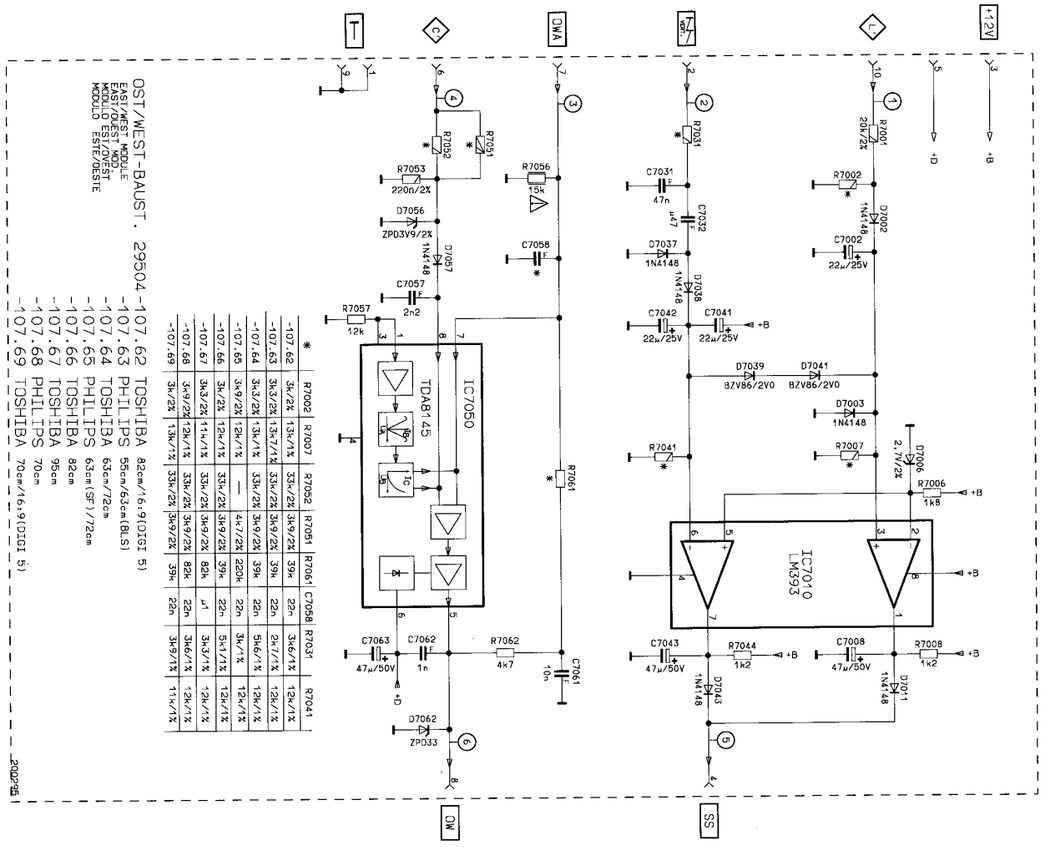

*	R7002	R7007	R7052	R7051	R7061	C7058	R7053	R7041
-107.62	3k/2%	13k/1%	33k/2%	3k9/2%	39k	22n	3k6/1%	12k/1%
-107.63	3k3/2%	13k7/1%	33k/2%	3k9/2%	39k	22n	2k7/1%	12k/1%
-107.64	3k3/2%	13k/1%	33k/2%	3k9/2%	39k	22n	5k6/1%	12k/1%
-107.65	3k9/2%	12k/1%	—	4k7/2%	220k	22n	3k/1%	12k/1%
-107.66	3k/2%	12k/1%	33k/2%	3k9/2%	39k	22n	5k1/1%	12k/1%
-107.67	3k3/2%	11k/1%	33k/2%	3k9/2%	82k	µ1	3k3/1%	12k/1%
-107.68	3k9/2%	12k/1%	33k/2%	3k9/2%	82k	22n	3k6/1%	12k/1%
-107.69	3k/2%	13k/1%	33k/2%	3k9/2%	39k	22n	3k9/1%	11k/1%

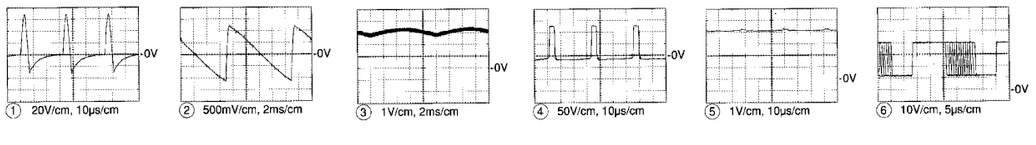

CRT Diagram

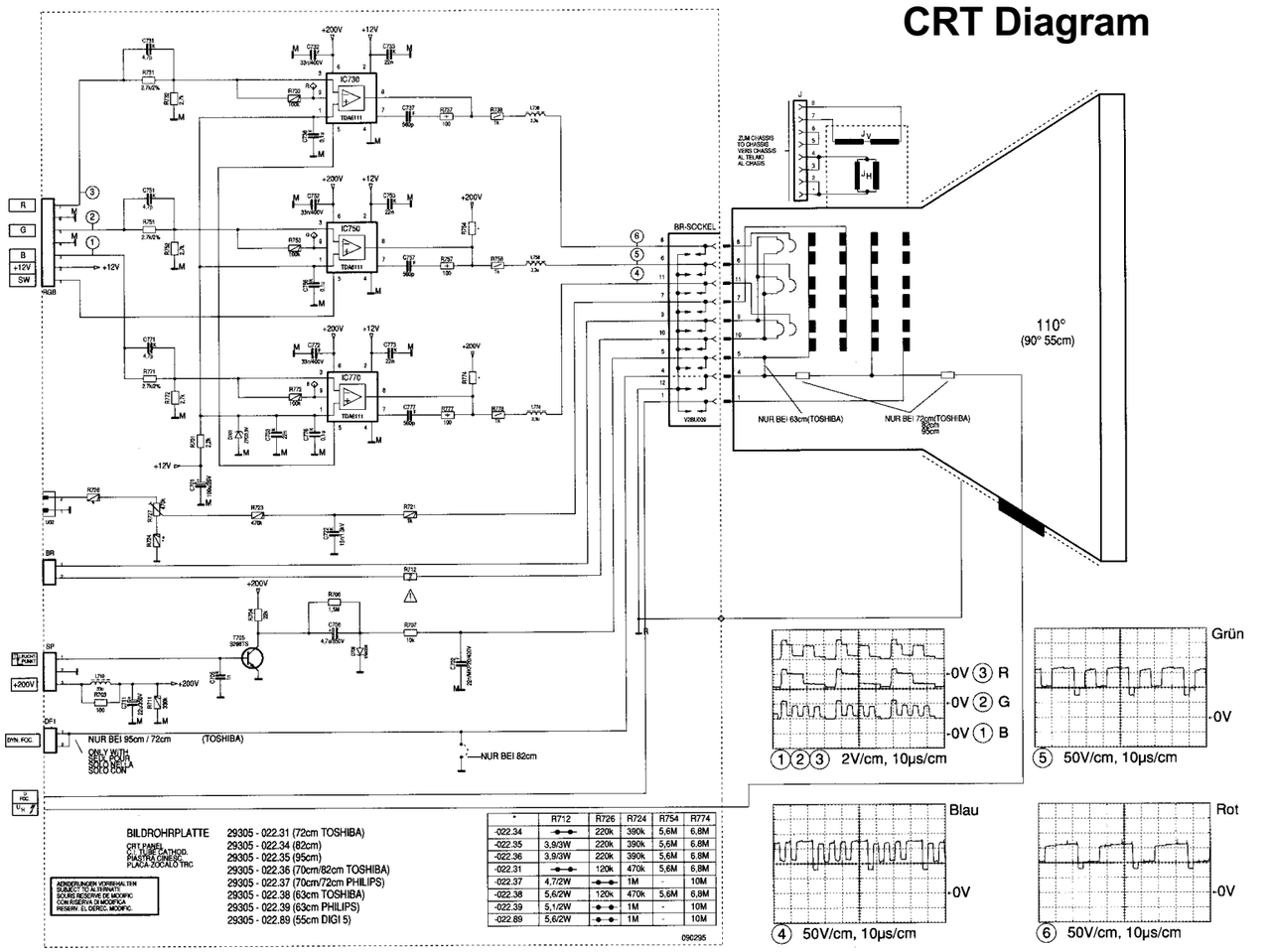

BILDROHRPLATTE
CRT PANEL
PLAQUE CATHOD.
PIASTRA CINESC.
PLACA-ZOCALO TRC

	29305 - 022.31 (72cm TOSHIBA)
	29305 - 022.34 (82cm)
	29305 - 022.35 (95cm)
	29305 - 022.36 (70cm/82cm TOSHIBA)
	29305 - 022.37 (70cm/72cm PHILIPS)
	29305 - 022.38 (63cm TOSHIBA)
	29305 - 022.39 (63cm PHILIPS)
	29305 - 022.89 (55cm DIGI 5)

*	R712	R726	R724	R754	R774
-022.34	●—●	220k	390k	5,6M	6,8M
-022.35	3,9/3W	220k	390k	5,6M	6,8M
-022.36	3,9/3W	220k	390k	5,6M	6,8M
-022.31	●—	120k	470k	5,6M	6,8M
-022.37	4,7/2W	●—●	1M	-	10M
-022.38	5,6/2W	120k	470k	5,6M	6,8M
-022.39	5,1/2W	●—●	1M	-	10M
-022.89	5,6/2W	●—●	1M	-	10M

090295

Waveforms
- Video Diagram

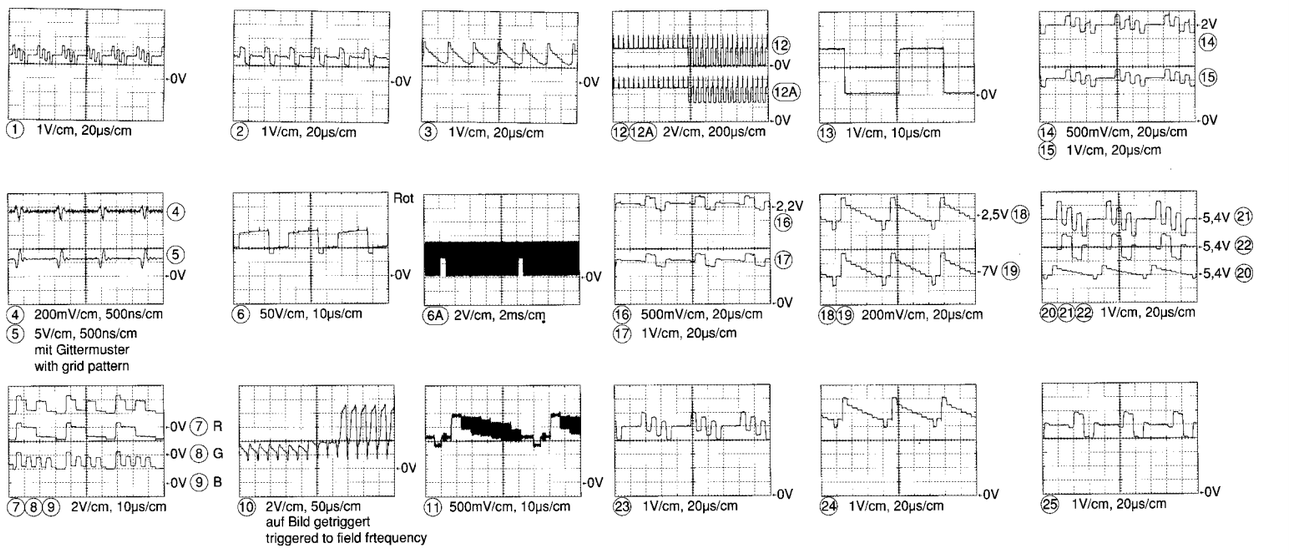

Video Diagram

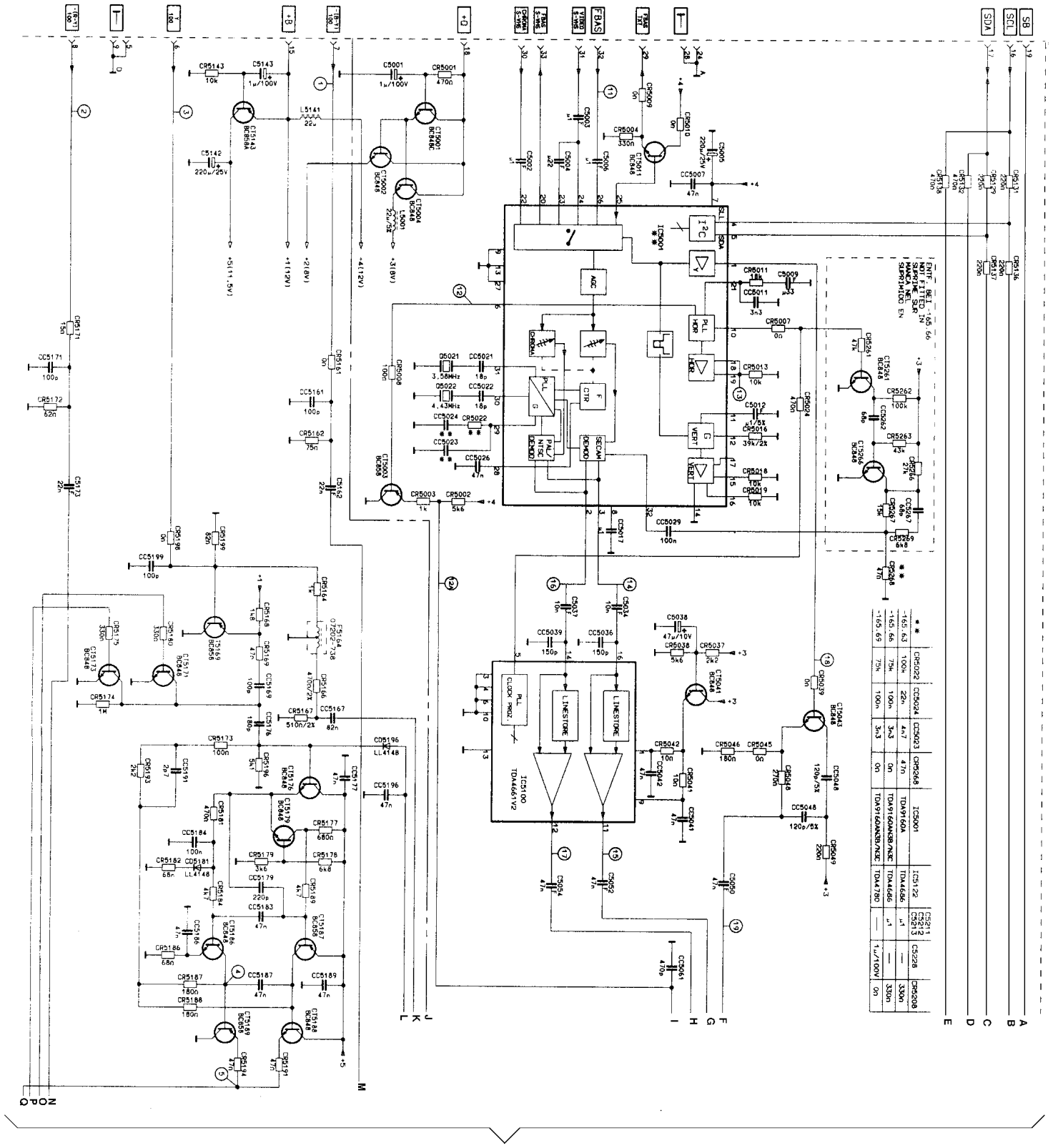

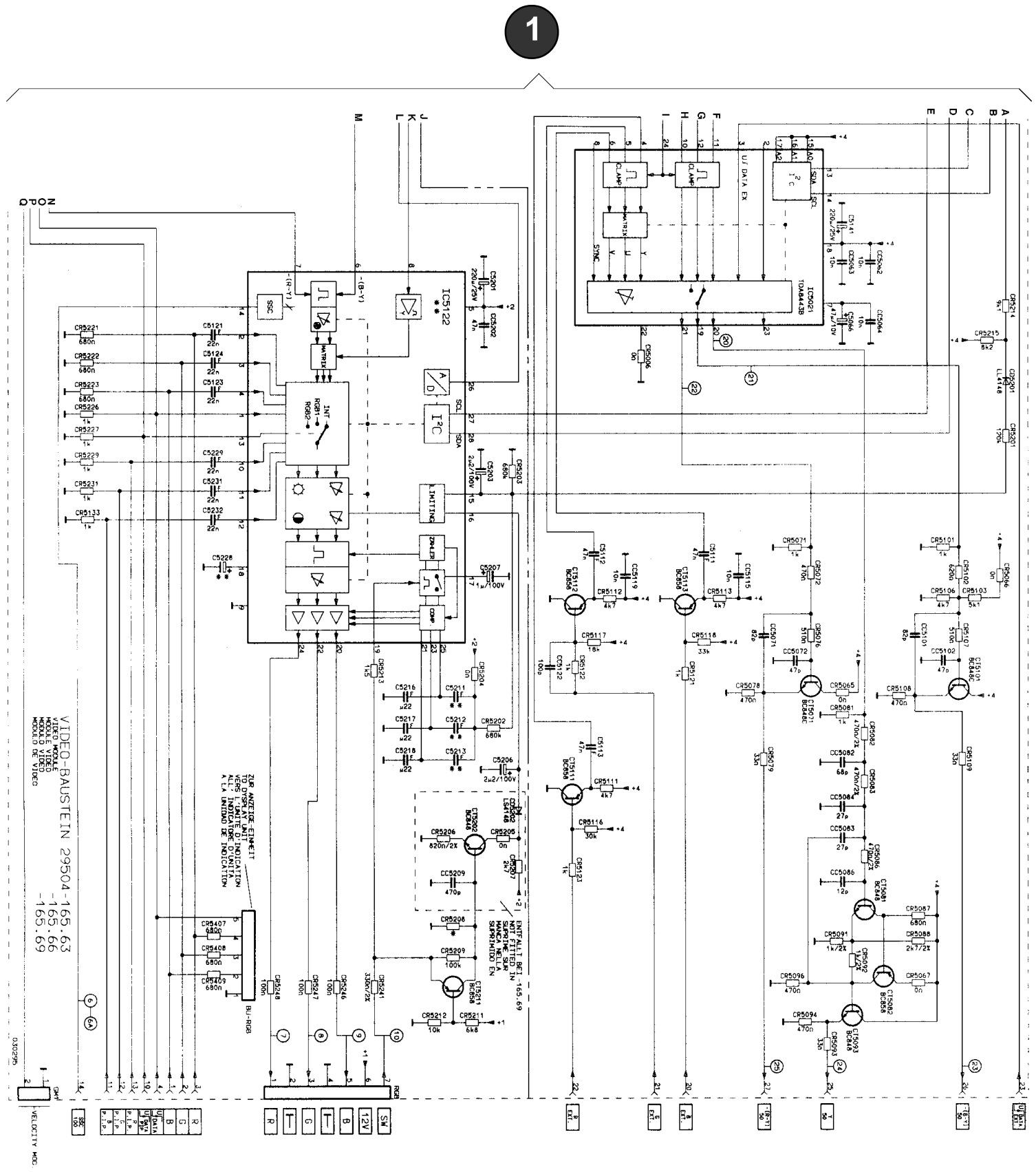

Continued at 1

Sandcastle Diagram

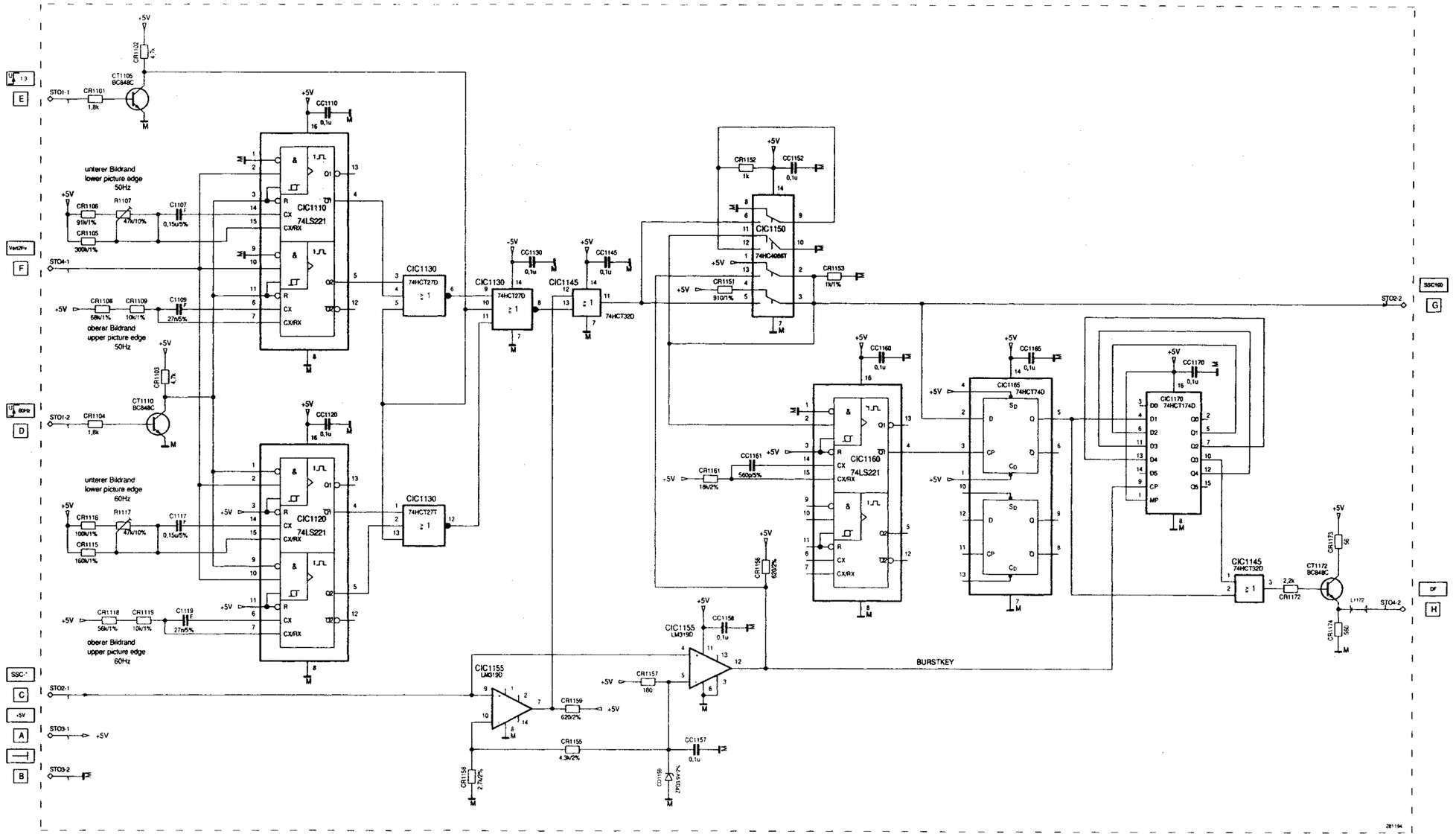

Control Diagram

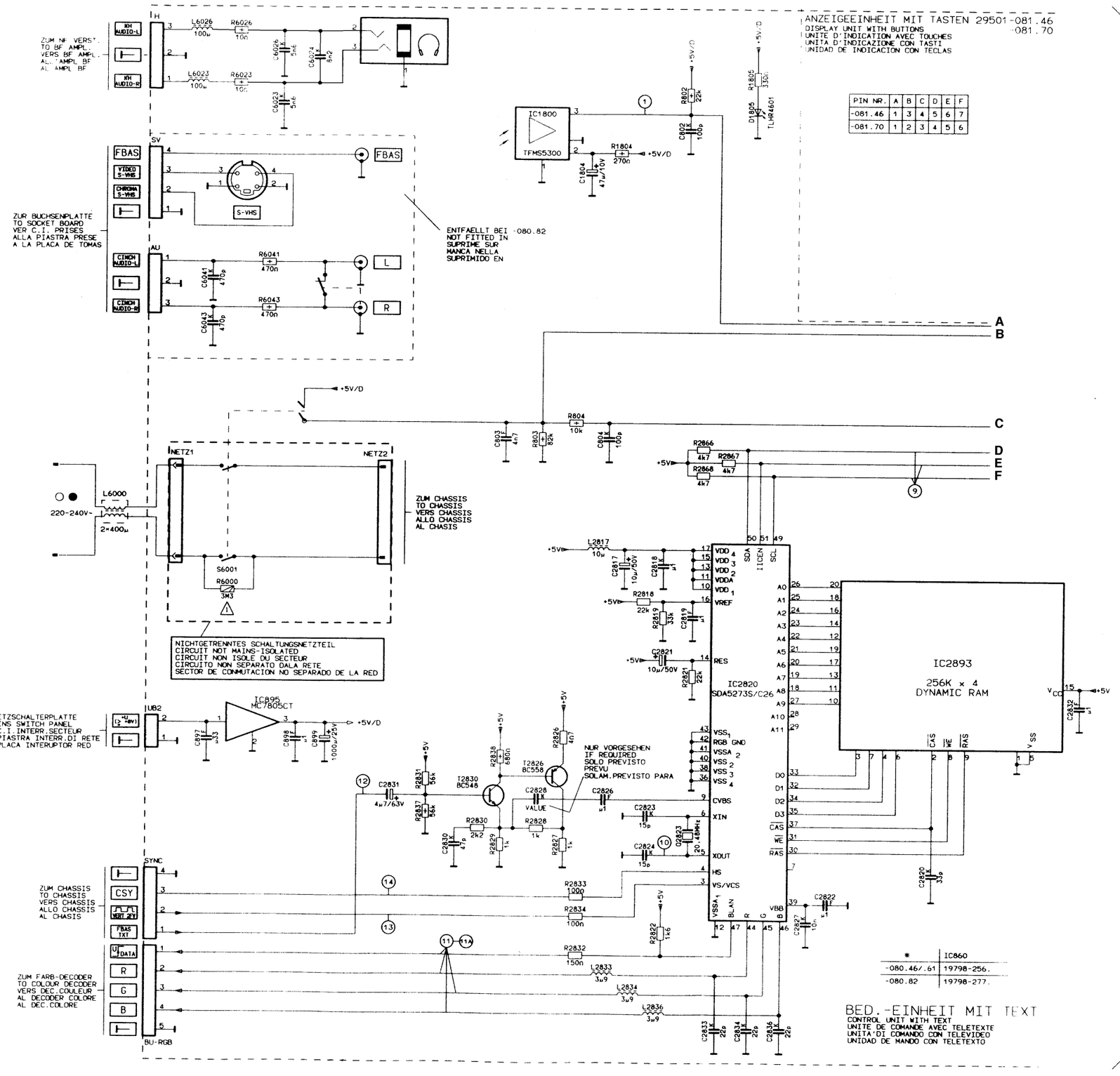

Continued at 2

Control Diagram Cont'd

2

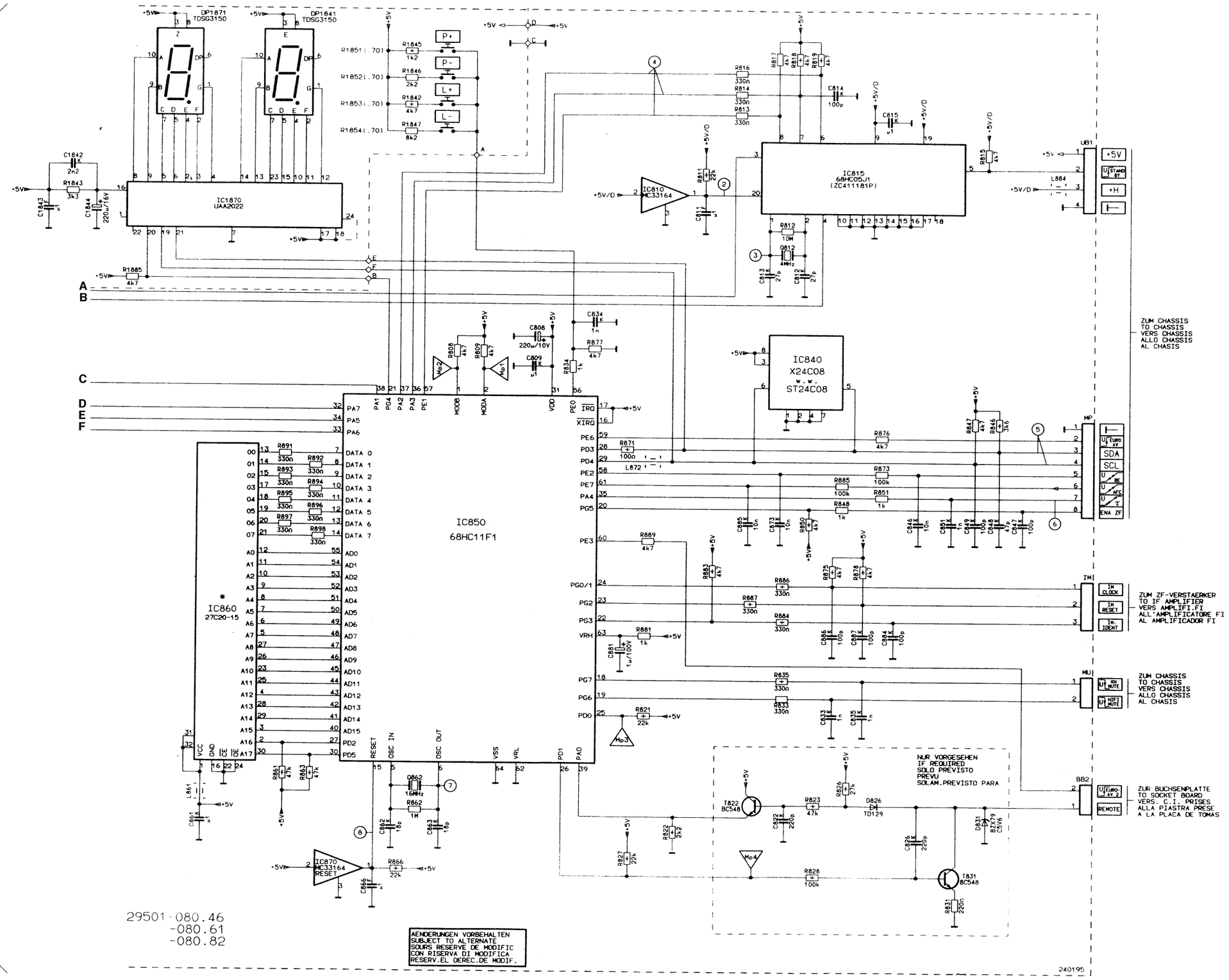

Feature Box Diagram

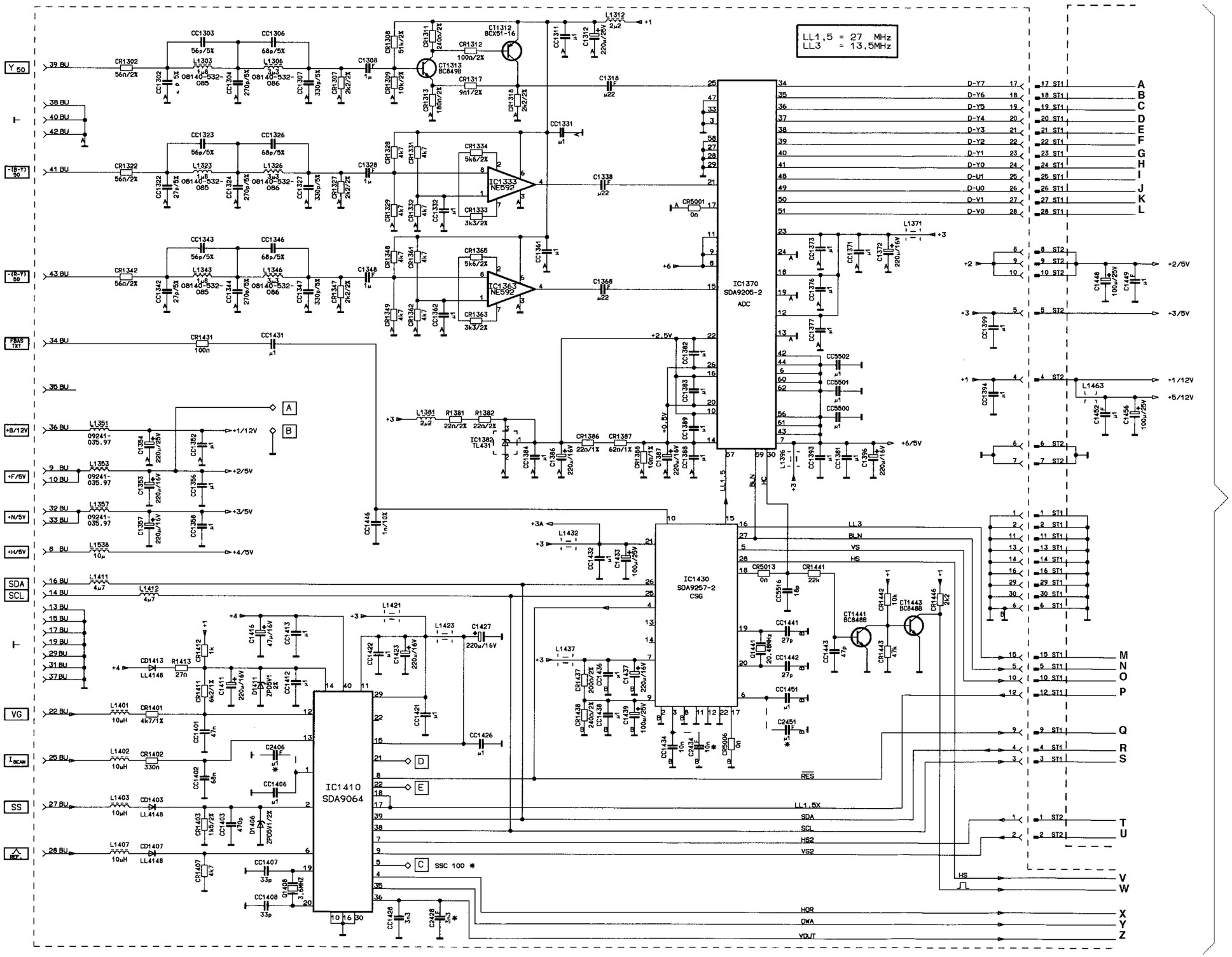

Continued at 3

Feature Box Diagram Cont'd

3

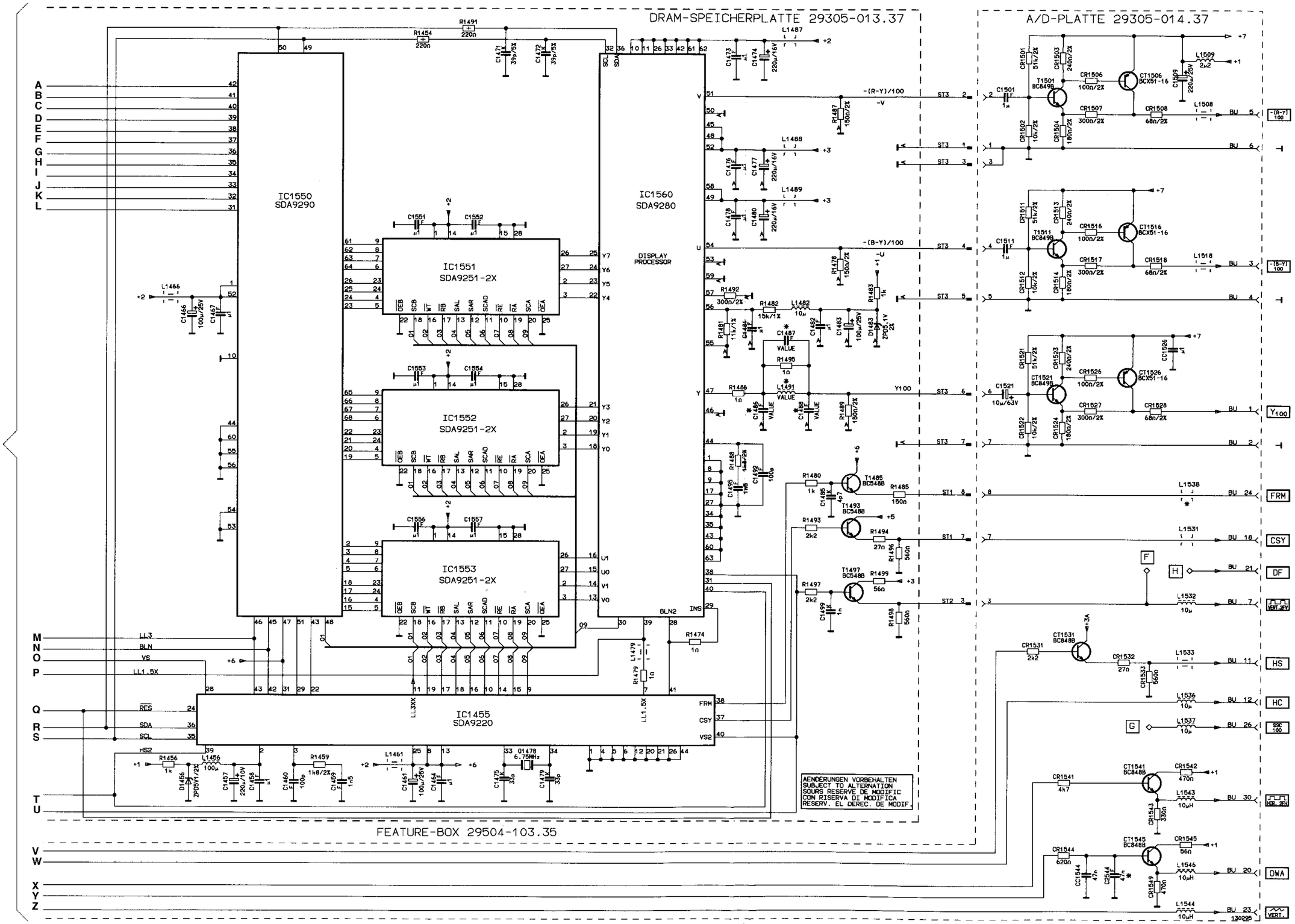

Focussing Diagram

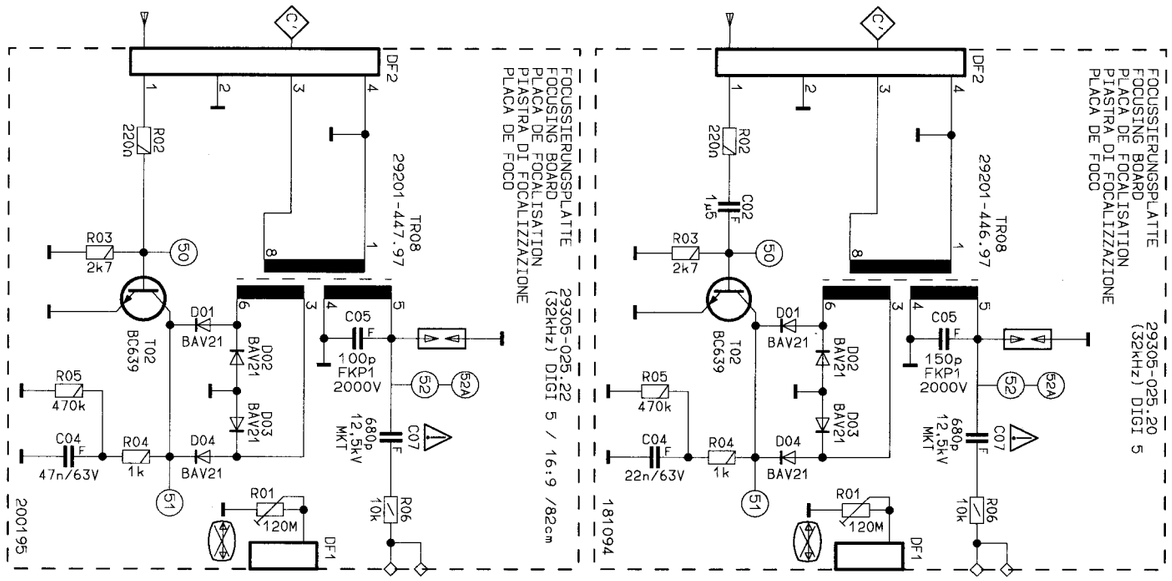

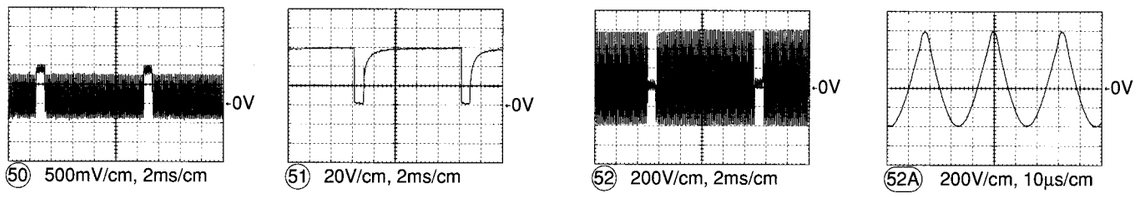

Power Supply Diagram

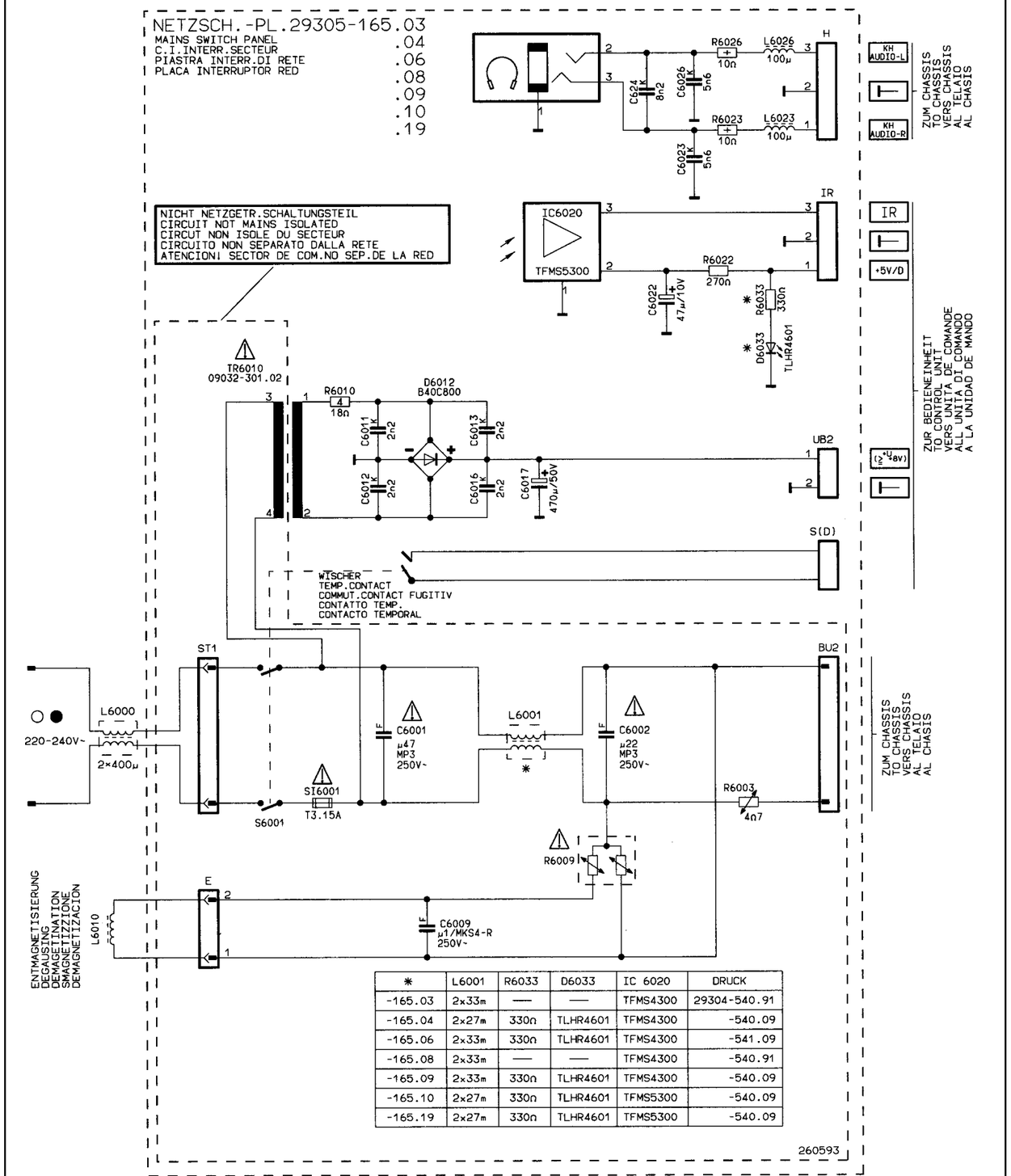

*	L6001	R6033	D6033	IC 6020	DRUCK
-165.03	2x33m	—	—	TFMS4300	29304-540.91
-165.04	2x27m	330Ω	TLHR4601	TFMS4300	-540.09
-165.06	2x33m	330Ω	TLHR4601	TFMS4300	-541.09
-165.08	2x33m	—	—	TFMS4300	-540.91
-165.09	2x33m	330Ω	TLHR4601	TFMS4300	-540.09
-165.10	2x27m	330Ω	TLHR4601	TFMS5300	-540.09
-165.19	2x27m	330Ω	TLHR4601	TFMS5300	-540.09

Interference Diagram

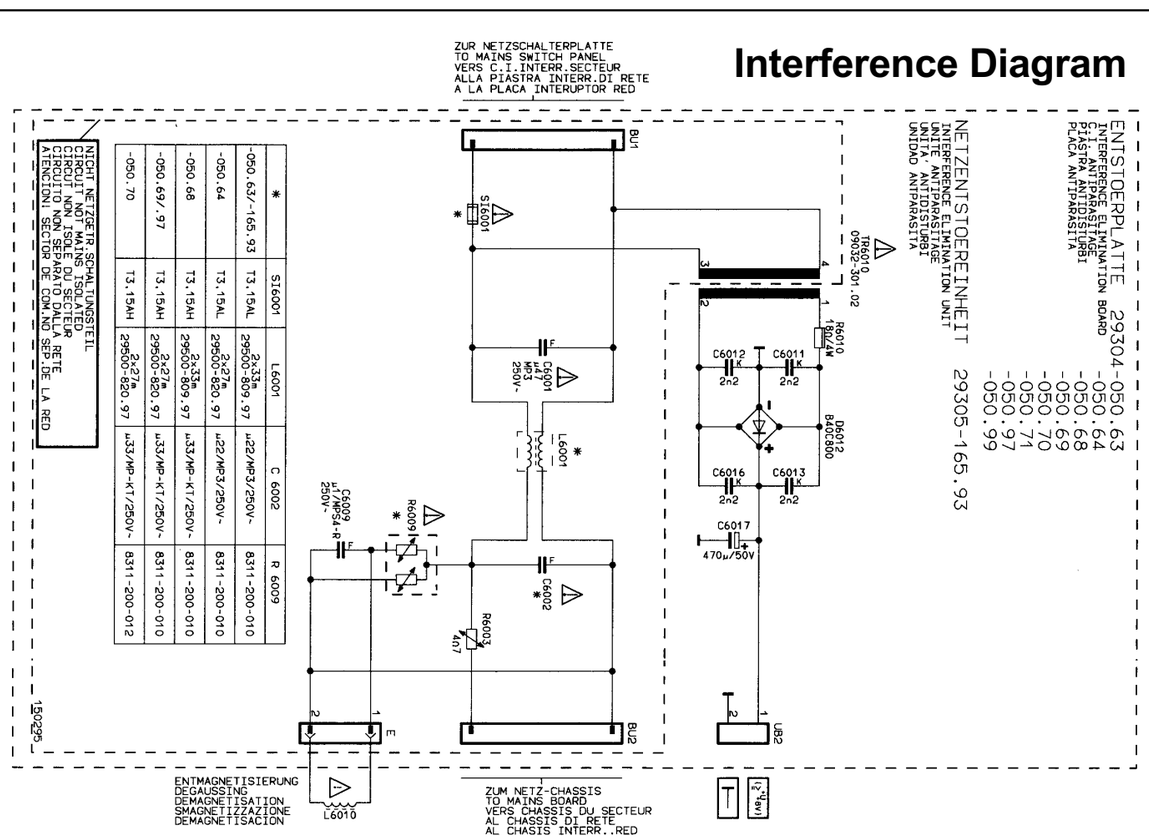

*	SI6001	L6001	C 6002	R 6009
-050.63/-165.93	T3.15AL	2x33m 29500-809.97	µ22/MP3/250V~	8311-200-010
-050.64	T3.15AL	2x27m 29500-820.97	µ22/MP3/250V~	8311-200-010
-050.68	T3.15AH	2x33m 29500-809.97	µ33/MP-K7/250V~	8311-200-010
-050.69/.97	T3.15AH	2x27m 29500-820.97	µ33/MP-K7/250V~	8311-200-010
-050.70	T3.15AH	2x27m 29500-820.97	µ33/MP-K7/250V~	8311-200-012

Main Diagram

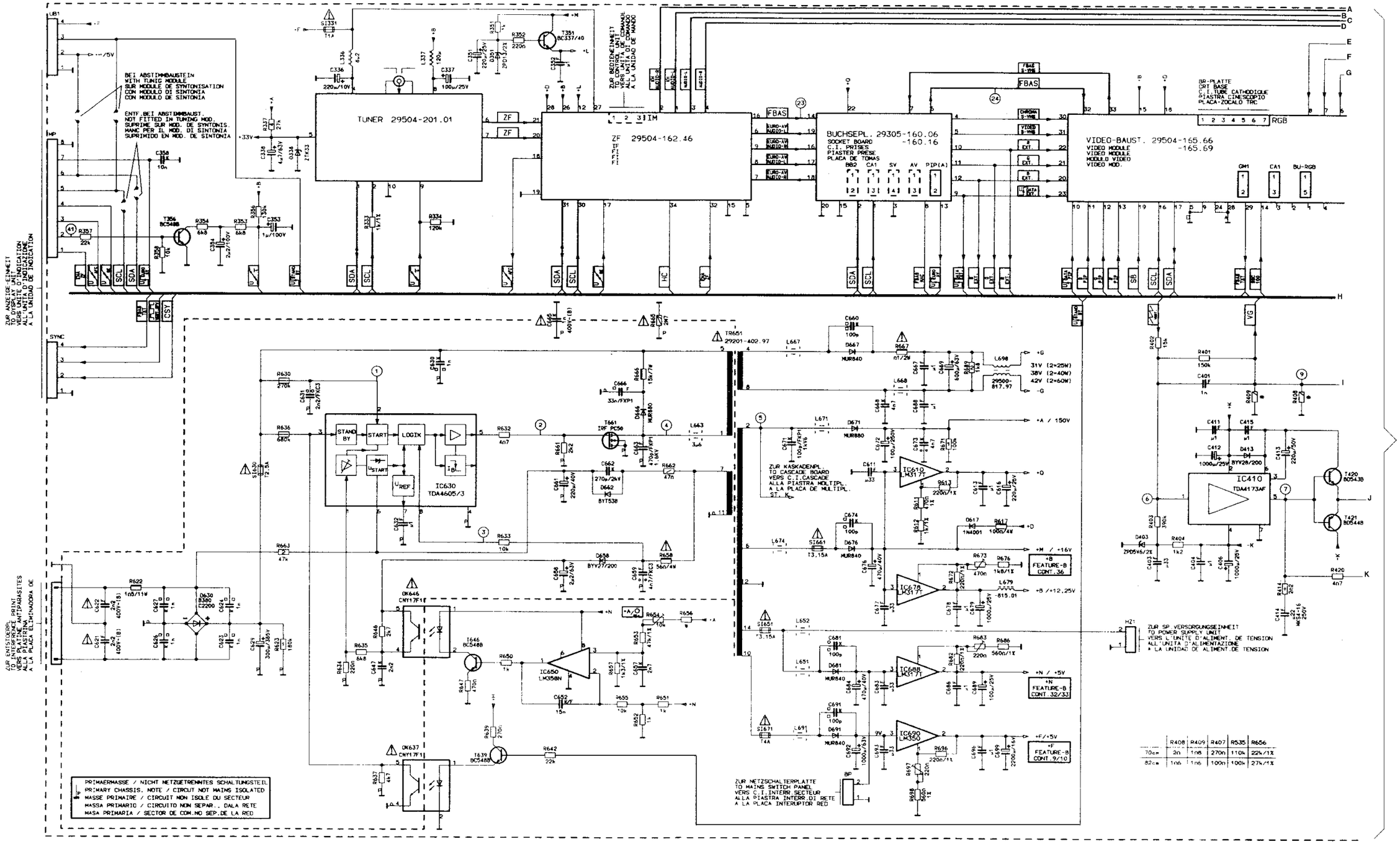

	R408	R409	R407	R535	R656
70cm	2Ω	1n8	270n	110k	22k/1%
82cm	1n5	1n8	100n	100k	27k/1%

Continued at 4

Main Diagram Cont'd

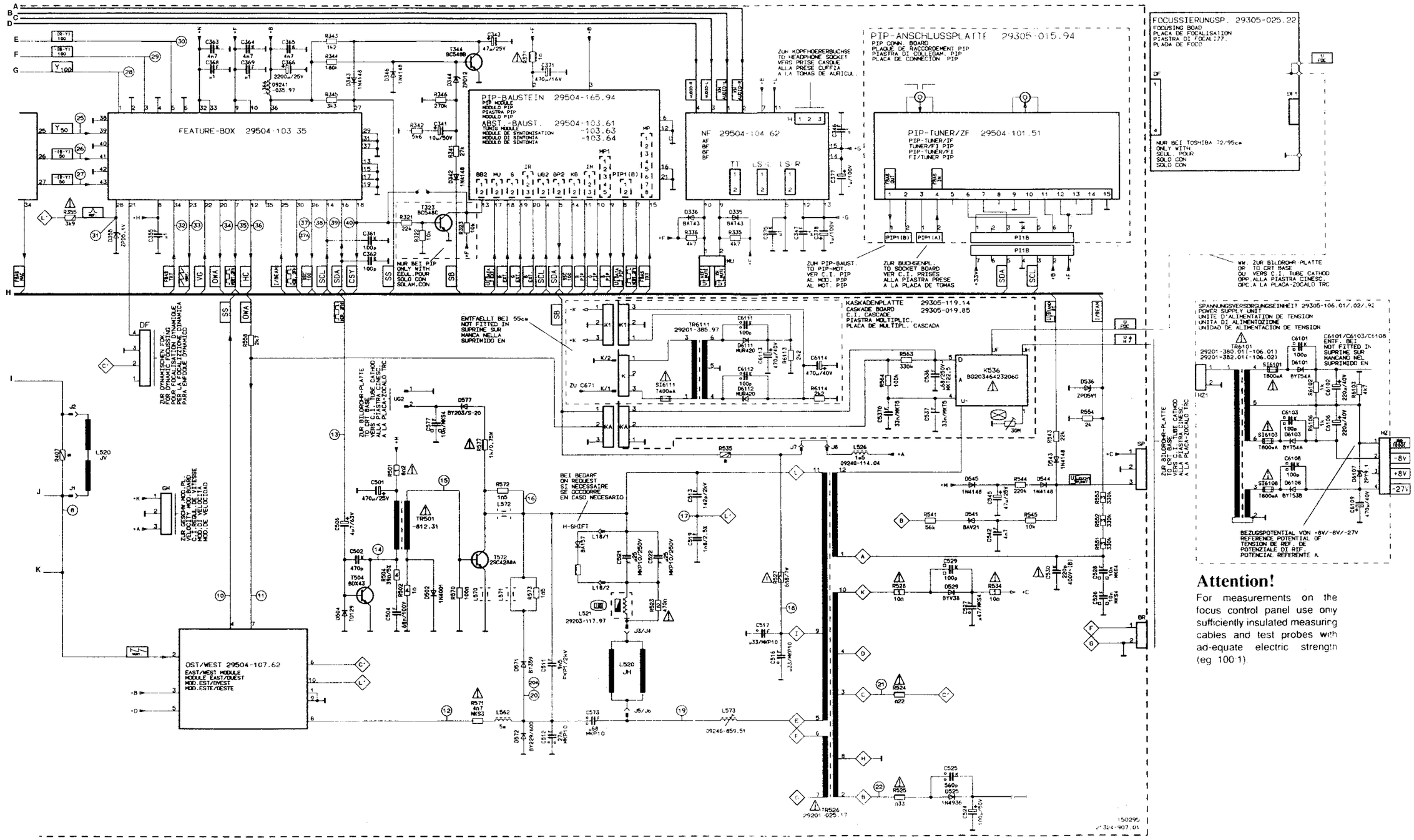

4

Attention!

For measurements on the focus control panel use only sufficiently insulated measuring cables and test probes with ad-equate electric strength (eg 100:1).

Velocity Diagram

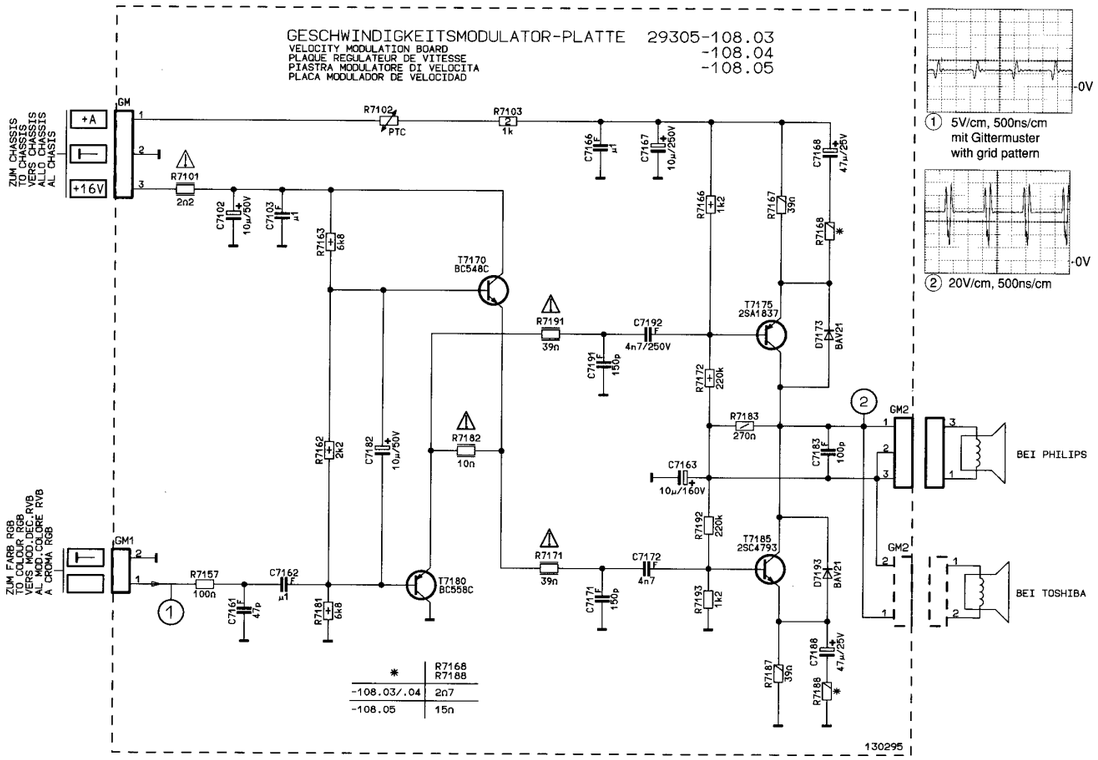

Socket Diagram

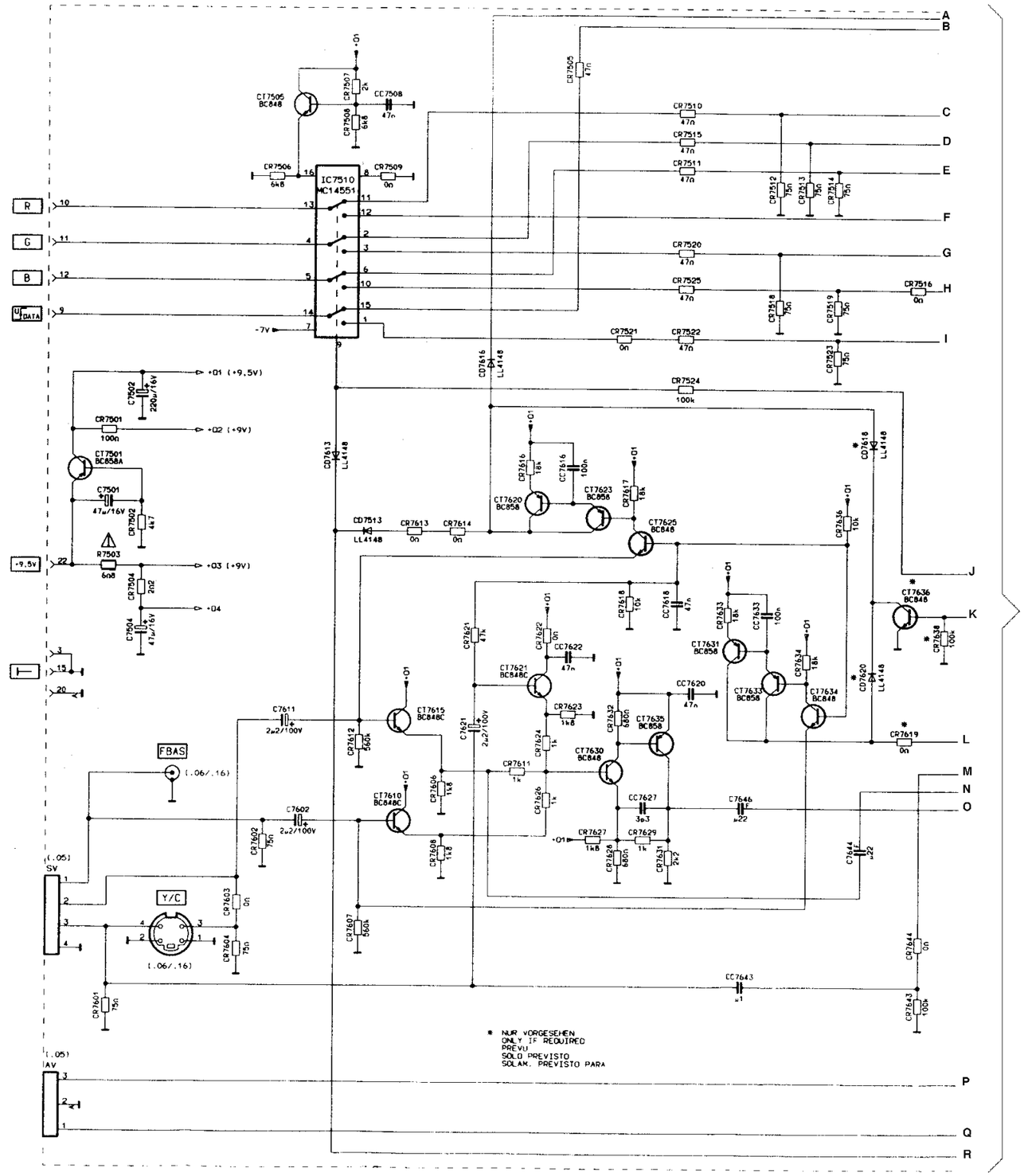

Continued at 5

Socket Diagram Cont'd

5

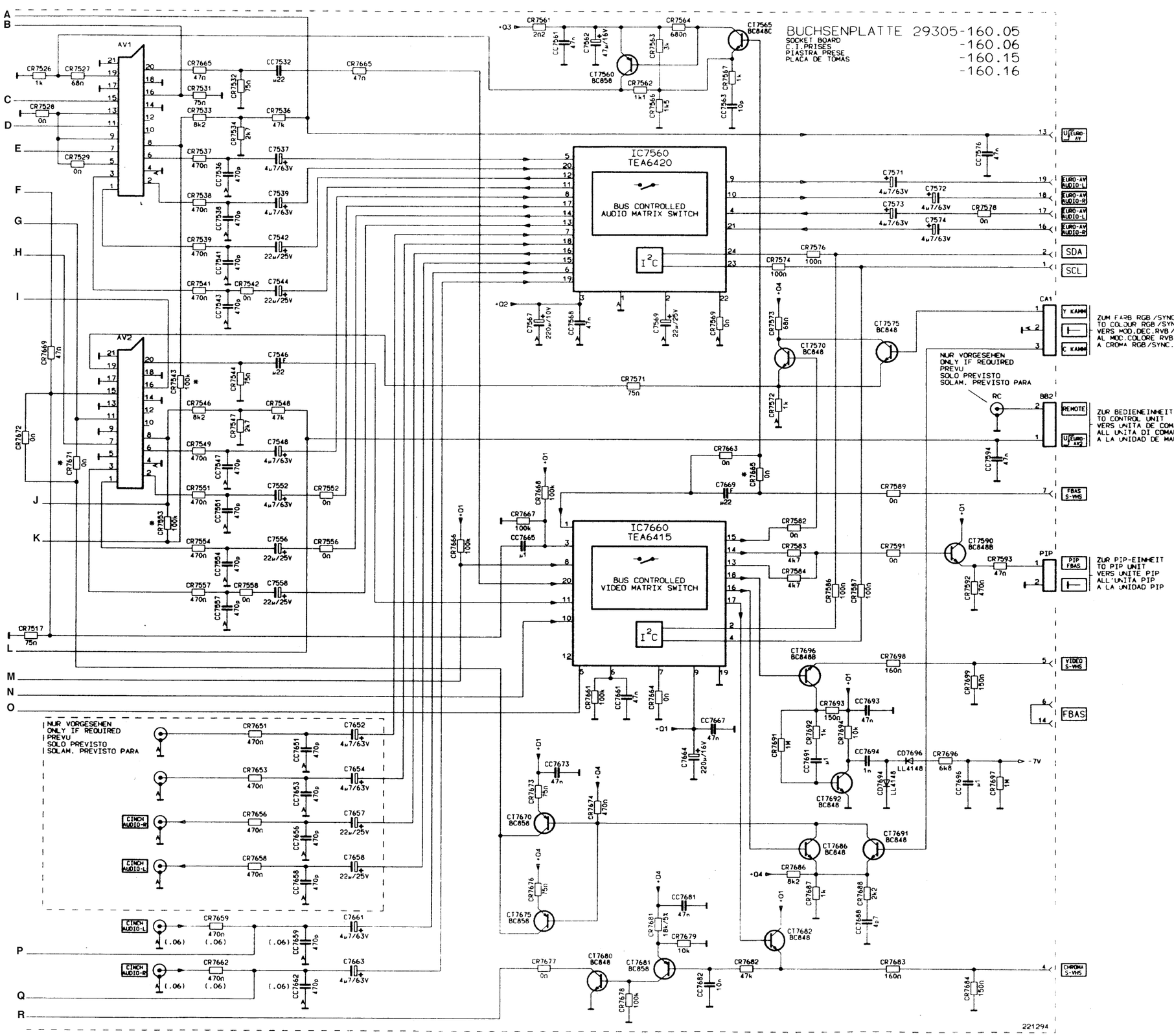

Tuner Diagram

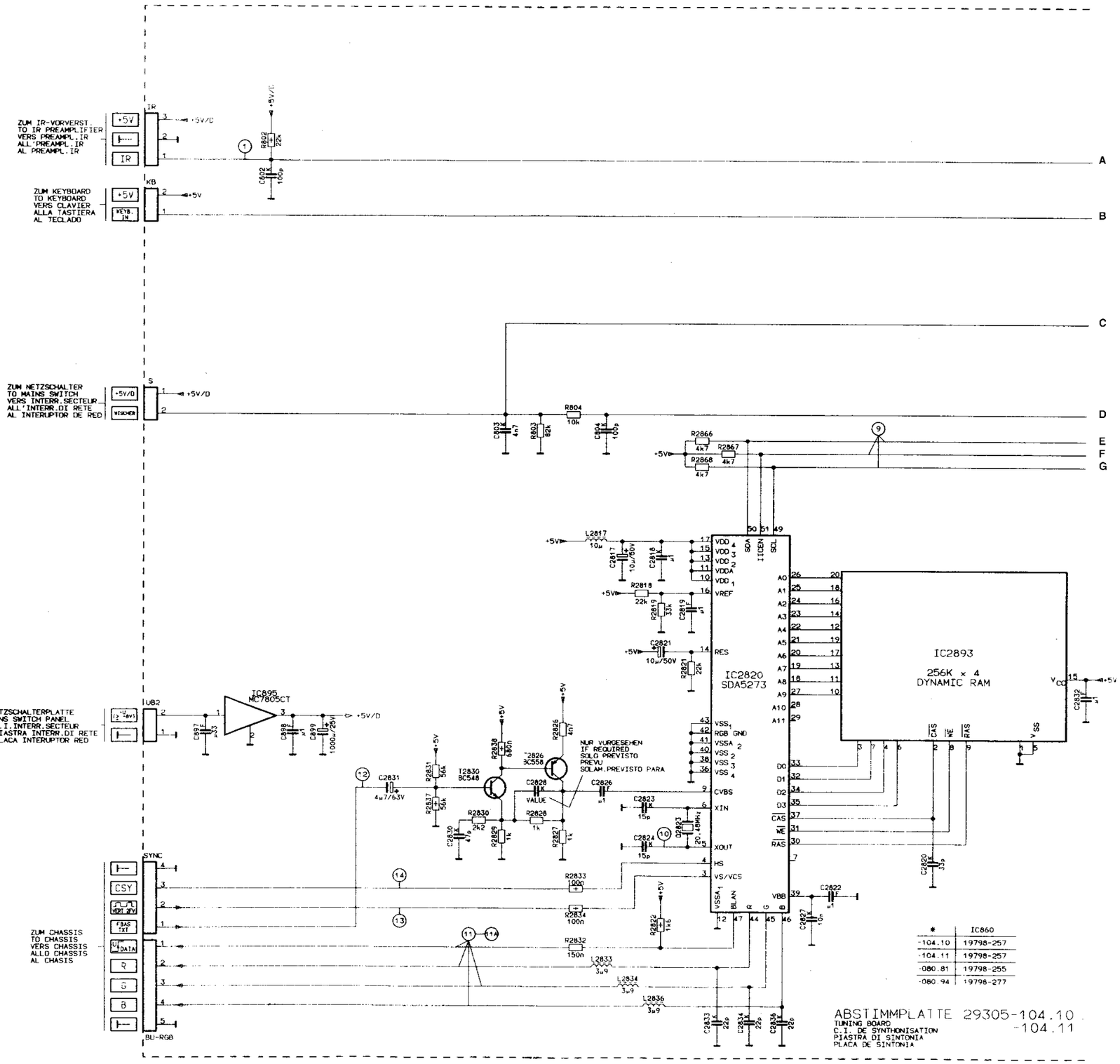

Continued at 6

Tuner Diagram Cont'd
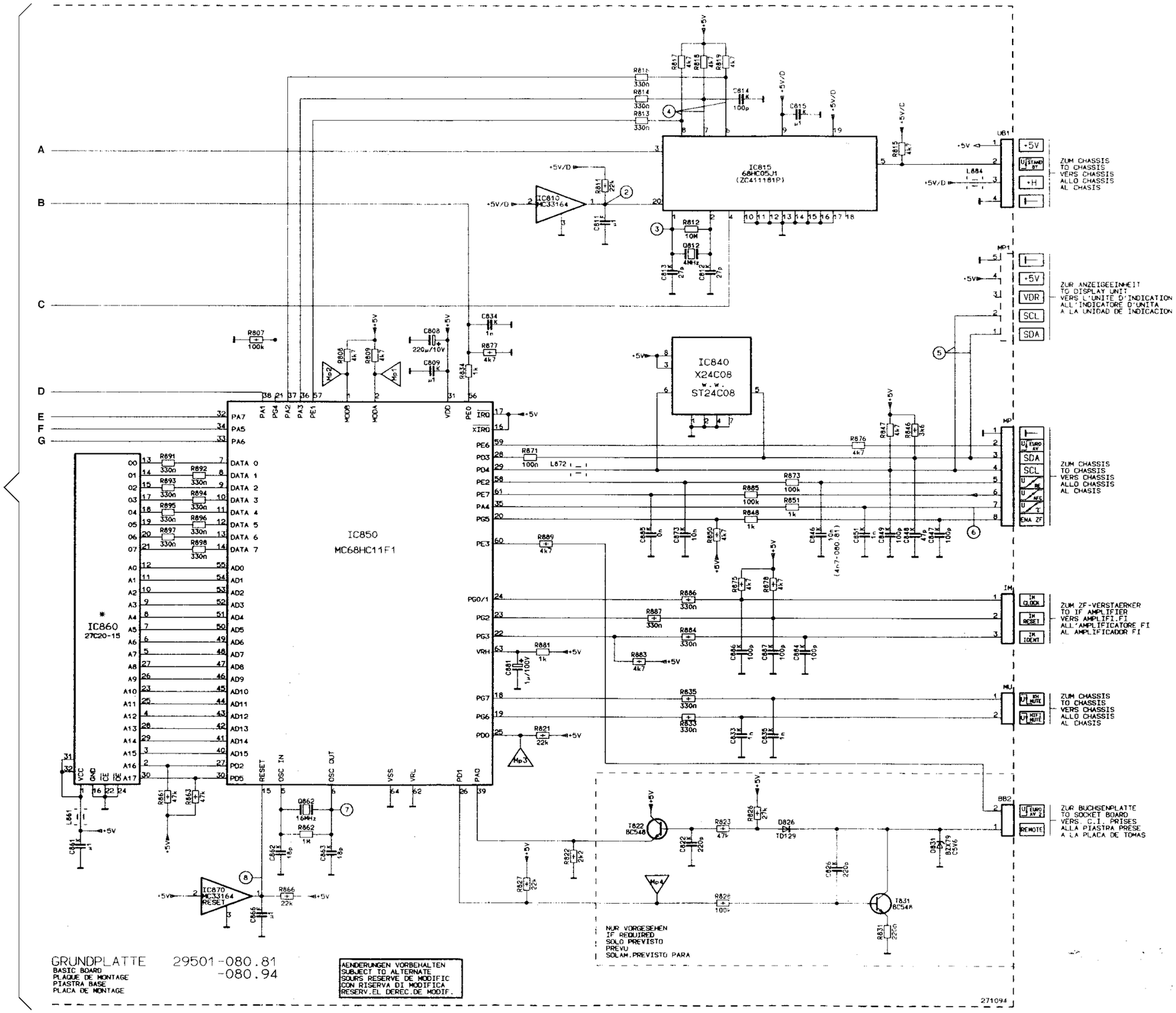
6